NPN SILICON RF POWER TRANSISTOR

DESCRIPTION:

The **ASI PT3642** is Designed for Class A,B,C Amplifier, Oscillator and Driver Applications Covering 130 to 400MHz.

FEATURES INCLUDE:

- Emitter Ballasted
- Common Emitter Package

MAXIMUM RATINGS

I_C	3.0 A
V_{CE}	40 V
P_{DISS}	23 W @ T_C = 25 °C
T_J	-65 °C to +200 °C
T_{STG}	-65 °C to +200 °C
θ_{JC}	7.6 °C/W

PACKAGE STYLE TO- 60

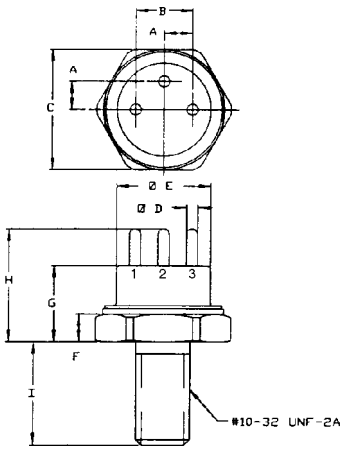

1 = EMITTER 2 = BASE
3 = COLLECTOR CASE = EMITTER

	MINIMUM Inches/mm	MAXIMUM Inches/mm
A	.090/2,29	.110/2,79
B	.185/4,70	.215/5,46
C	.420/10,67	.440/11,18
D	.030/0,76	.046/1,17
E	.320/8,13	.360/9,14
F	.090/2,29	.135/3,43
G	.215/5,46	.320/8,13
H		.480/12,19
I	.420/10,67	.455/11,56

CHARACTERISTICS T_C = 25 °C

SYMBOL	TEST CONDITIONS	MINIMUM	TYPICAL	MAXIMUM	UNITS
BV_{CEO}	I_C = 200 mA	40			V
BV_{CEX}	I_C = 200 mA V_{BE} = -1.5 V	65			V
BV_{CBO}	I_C = 500 µA	65			V
I_{CEO}	V_{CE} = 30 V			250	µA
I_{EBO}	V_{EB} = 4.0 V			250	µA
h_{FE}	V_{CE} = 5.0 V I_C = 1.0 A	5.0			---
C_{ob}	V_{CB} = 30 V f = 1.0 MHz			20	pF
f_t	V_{CE} = 28 V I_C = 150 mA f = 100 MHz		400		MHz
P_{out} G_P η_C	V_{CE} = 28 V f = 175 MHz	13.5 5.8 70			W dB %

ADVANCED SEMICONDUCTOR, INC.
7525 ETHEL AVENUE • NORTH HOLLYWOOD, CA 91605 • (818) 982-1200 • FAX (818) 765-3004

Specifications are subject to change without notice.