LPO 14 SERIES, Model 4

14 pin Dual-in-Line Package

DESCRIPTION

The Euroquartz LPO14 series of low power consumption oscillators are ideal parts providing the time base signals for real-time clocks. The oscillators have very low current consumption (as low as 14mA) and are ideal for battery operated devices such as data logging and portable test equipment.

FEATURES

- **Very low current consumption from 14mA**
- **Industry-standard 14 pin DIL package**
- **Wide frequency range, from 1Hz to 160kHz**
- **Supply Voltage from 2.0 Volts to 15.0 Volts**
- **Standard CMOS output**

SPECIFICATION

Input Voltage:	**+3.3 VDC**	**+5.0VDC**
	+3.0 Volts to +15.0 Volts is available	
Frequency Range:	1Hz to 160kHz (Limited to standard frequencies.)	
Output Logic:	CMOS	
Output Voltage		
CMOS HIGH'1':	2.97V min.	4.5V min.
CMOS LOW '0':	0.33V max.	0.4V max.
Calibration Tolerance:	see table opposite	
Frequency Stability:	see curve opposite	
Current Consumption:	26mA typical	45mA typical
Rise/Fall Times:	0.5ns typical, 1ns maximum (Measured from 10%Vdd to 90%Vdd)	
Start-up Voltage:	1.90 VDC	
Duty Cycle:	50%±5% typical, 50%±10% maximum	
Start-up Time:	450ms maximum	
Storage Temperature:	-50° to +100°C	
Ageing:	±5ppm maximum at 25°C	

FREQUENCY DEVIATION vs TEMPERATURE

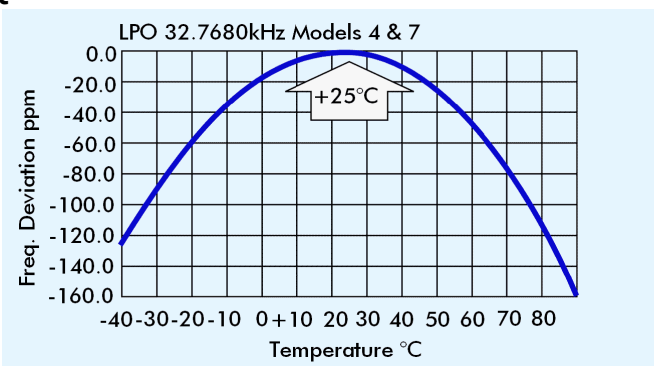

kHz RANGE OSCILLATORS mA CURRENT CONSUMPTION

If you require oscillators in the kHz frequency range with mA current consumption please see our standard CMOS oscillator range.

STOCK HOLDING AND CUSTOM PARTS

Euroquartz maintain a large stock of standard frequency and specification oscillators. If you require custom frequencies and/or specification oscillators, Euroquartz will manufacture in-house with short delivery

OUTLINES AND DIMENSIONS

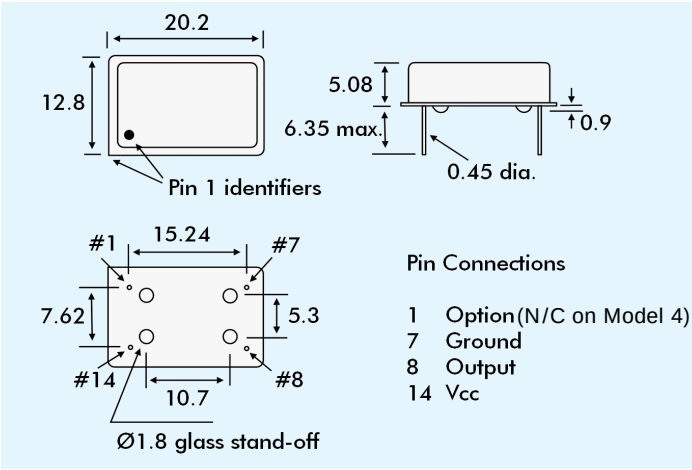

CURRENT CONSUMPTION vs SUPPLY VOLTAGE

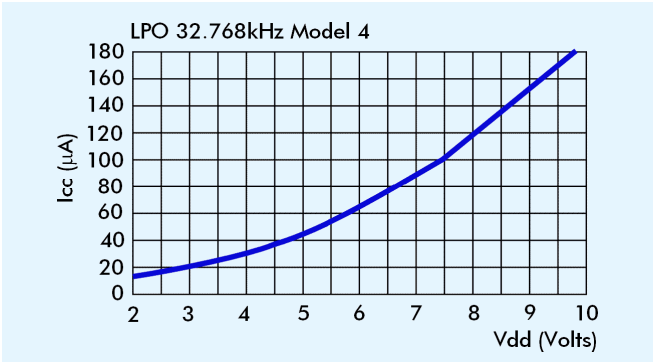

CALIBRATION TOLERANCE

Euroquartz Part Number Suffix	Cailbration Tolerance at 25°C
P	±10ppm
A	±25ppm
B	±50ppm
C	±100ppm

PART NUMBER GENERATION

LPO oscillators part numbers are derived as follows:
EXAMPLE:

5LPO14-C4-32.768k

Voltage Code
'5' = 5 Volts
'3' = 3 Volts (etc.)
Package Code
LPO14 = 14 pin DIL
Calibration Tolerance
P, A, B or C
Model Code
4 or 7
Frequency
k = kHz, H = Hz

EUROQUARTZ LIMITED Blacknell Lane CREWKERNE Somerset UK TA18 7HE
Tel: +44 1460 230000 Fax: +44 1460 230001 email: info@euroquartz.co.uk web: www.euroquartz.co.uk