THE DRAWING ON THIS PRINT AND INFORMATION THEREWITH ARE PROPRIETARY TO VARITRONIX AND SHALL NOT BE USED IN WHOLE OR IN PART WITHOUT WRITTEN PERMISSION OF VARITRONIX.

ISSUE	AMENDMENT	DATE

PRELIMINARY

(DOT SIZE FOR CUSTOMER REFERENCE ONLY)

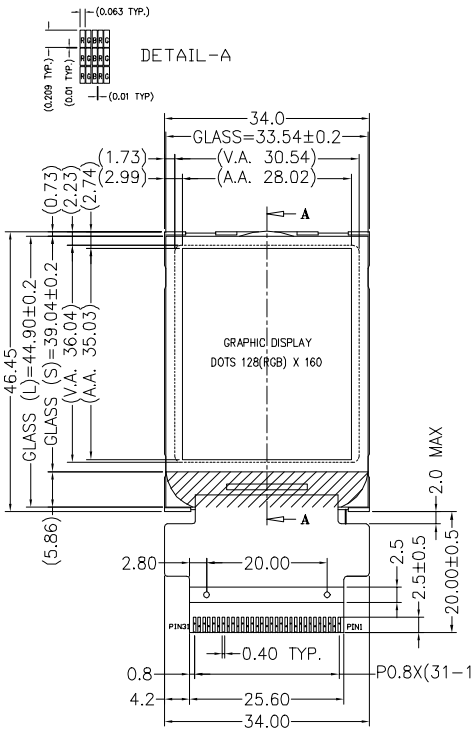

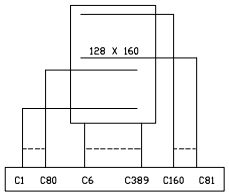

(DOT CONNECTOR)

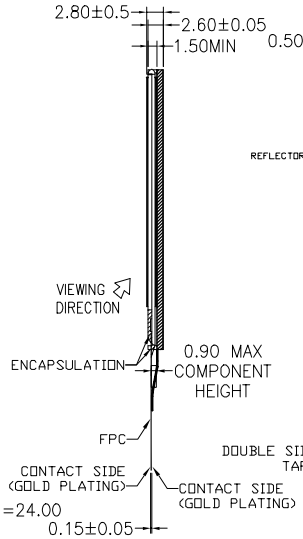

SECTION AA

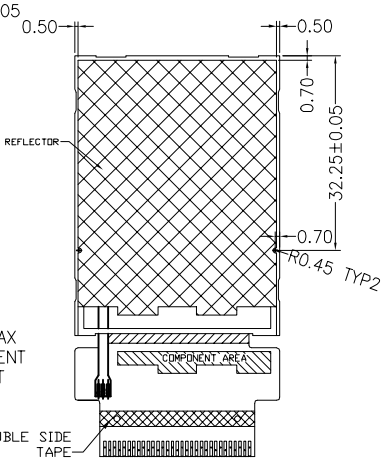

DISPLAY TYPE	CSTN, TRANSMISSIVE, -VE		
DISPLAY RESOLUTION	128 X RGB X 160 DOTS		
VIEWING ANGLE	6 o'clock		
MUX RATIO	1/160		
LCD DRIVER	UDS191		
LOGIC VOLTAGE (V)	3.0V		
LCD DRIVING VOLTAGE	TBD		
OPERATION TEMPERATURE	-10℃ to +60℃		
STORAGE TEMPERATURE	-20℃ to +70℃		
BACKLIGHT	TYPE	LED	
	COLOR	WHITE (2 LEDs)	
	WAVELENGHT	NA	
	DRIVING CIRCUIT	3.2V (30mA)	
	Luminance (cd/m2) (on the BL surface)	Min.	--
		Typ.	2200
		Max.	--
REMARK			

1	2	3	4	5	6	7	8	9	10	11	12	13	14	15	
K	A2	A1	VDD2	VSS	TE	DS	BS0	BS1	CSB	RESB	WRB	RDB	D/C	D0	
16	17	18	19	20	21	22	23	24	25	26	27	28	29	30	31
D1	D2	D3	D4	D5	D6	D7	D8	D9	D10	D11	D12	D13	D14	D15	VDD1

NOTES:
1. ◇ : SPECIAL CHARACTERISTIC
2. + : SAFETY CHARACTERISTIC
3. ▽ : CRITICAL DIMENSION
4. (..) : REFERENCE DIMENSION

VARITRONIX LIMITED

TITLE: LCM Module Specification

PROJECT NO: COG-C177MVHA-01

CUSTOMER REF:

TOLERANCE UNLESS OTHERWISE SPECIFIED: X.X ±0.3, X.XX ±0.1, ANGULAR: ± 1°

DIMENSIONS IN MM

MATERIAL: N/A | FINISH: N/A

SCALE: DO NOT ON SCALE | OVERALL THK: N/A

THIRD ANGLE PROJECTION

	NAME	SIGN	DATE
DRAWN:	CHAN KAM FAI		06.04.11
CHECKED:	POON DANIEL		
APPROVED:	CYRUS CHEUNG		

ITEM NO.:

DESCRIPTION:

FILE NO: COG COG-C177MVHA-01 | REV: 0

SHEET 1 OF 1