International
IOR Rectifier

REFERENCE DESIGN

IRMD2231Q

International Rectifier • 233 Kansas Street, El Segundo, CA 90245 USA

IRMD22381Q Demo Board
For 3-phase / 380V motor drives

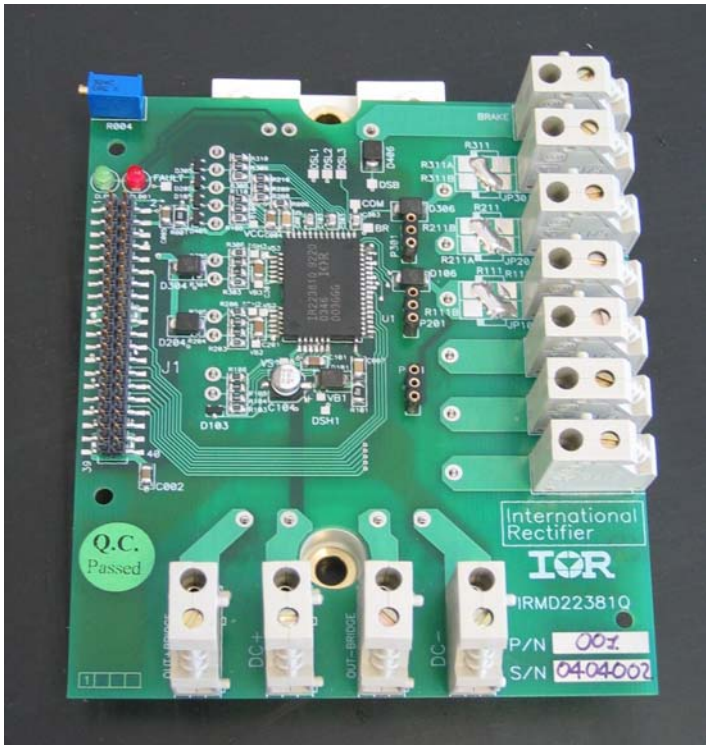

IR22381Q Demo Board without IGBT Power Module

IRMD22381Q Demo Board

For 3-phase / 380V motor drives

IRMD22381Q Demo Board

- Up to 1200V DC-bus capability
- Up to 25A maximum phase current
- Optional on-board phase shunt resistors
- IR22381Q device connected in 3-phase + brake configuration
- On-board bootstrap supply for high-side gate drive
- Full protection of phase-to-phase, DC-bus and ground short circuit by monitoring IGBT de-saturation
- Brake IGBT de-saturation protection
- Fault feedback to ground level
- Trimmer programmable dead time
- Anti-shoot-through management
- Phase voltage feedback
- Undervoltage lockout
- 3.3V digital input/output CMOS compatible
- IR22381Q can be replaced by IR21381Q

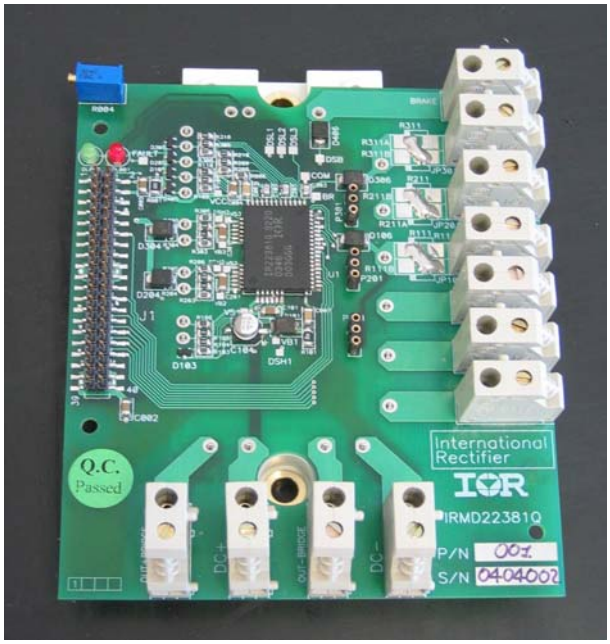

IR22381Q Demo Board
(Shown without IGBT Power Module)

Power Module

- Standard ECONO2-PIM IGBT module compatible
- IGBT short circuit rated up to 1200V/25A.
- Easy to mount heat-sink holes

Introduction

The IRMD22381Q demo board is an evaluation board for IR22381Q gate driver (see device datasheet for details). IRMD22381Q is designed to drive 3-phase power modules with pin-out compatible to ECONO2-PIM. The board can drive AC or Brushless motors using power modules with up to 25A output current. The board is a flexible solution for different applications and can be customized by means reconfigurable components options. The control signals are 3.3V CMOS compatible; three-phase shunt resistor (with sensing pins) can be placed for current loop control; power module short circuits are managed by IR22381Q by synchronization of the IGBTs turn off. Board layout reduces the noise coupling between high and low voltage signals.

Application Block Diagram

(Refer to connections section to see the interface pins) This diagram shows the main blocks and connections of the demo board and the external components necessary in a typical motor drive application.

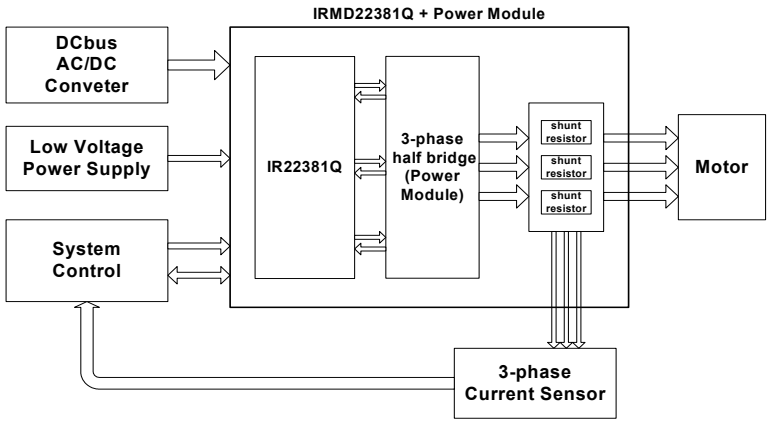

Table of contents

INTRODUCTION **1**
Table of contents *2*
Parameters *3*
The IR22381Q *3*
The power module *3*
Important Notice *3*
BOARD CONNECTORS **4**
Connection with the system controller *4*
FAULT logic signal *5*
DCF *5*
RT+ and RT- *5*
VFHx and VFLx *5*
VCC supply pin *5*
VSS ground pin (GND) *5*
5V *5*
Connecting the current sensors *6*
High power signal connector *6*
Connecting the power module *6*
Test Points *7*
TEST BENCH CONNECTION **8**
OPERATING DESCRIPTION **9**
Normal operating mode *9*
Fault management *9*
Multilevel board solution *9*
Precharge of the bootstrapped sections *9*
BOARD CUSTOMIZATION **10**
Bootstrap circuit *10*
Gate resistances *10*
OTHER EXTRA COMPONENTS **11**
Desat circuit *11*
Clamping Diode for Vs below ground *12*
RC filter on COM pin *13*
Fast diode between gate and supply pin *13*
Zener diode to preserve the IGBT gate *14*
Optional output shunt resistor *14*
Resistor on v_{cc} *14*
BILL OF MATERIAL **15**
SCHEMATIC LAYOUT **17**
LAYOUT **22**

Table of figures

Figure 1: TOP image of board 4
Figure 2: LED connection 5
Figure 3: Test bench connection 8
Figure 7: Bootstrap circuit 10
Figure 8: Desat external filter 11
Figure 9: -V_s clamp 12
Figure 10: COM below ground protection 13
Figure 11: Collector-Gate current protection 13
Figure 12: Zener clamp for IGBT gate 14

Parameters	Values	Description, condition
Input Power		
DC+	0 to 1200V	DC_{Bus} voltage positive with 1200V power module
DC-	ground	DC_{bus} voltage negative
V_{CC}	15V typ	Low voltage power supply. Follow IR22381Q datasheet for supply setting
V_{SS}	ground	Low voltage ground
I_{CC}	25 mA (max)	quiescent Vcc current
Output Power		
I_{Imax}	25A @25°C	max phase dc output current
Control Inputs/Outputs		
40 pin connector J1 I/Os	3.3V to 15V compatible	see "Board Connectors" section on page 4

The IR22381Q

The IR22381Q is a high voltage, 3-phase IGBT driver best suited for AC motor drive applications. Integrated desaturation logic provides all mode of overcurrent protection, including ground fault protection. The sensing desaturation input is provided by active bias stage to reject noise. Soft shutdown is predominantly initiated in the event of overcurrent followed by turn-off of all six outputs. A shutdown input is provided for a customized shutdown function. The DT pin allows external resistor to program the deadtime. Output drivers have separate turn on/off pins with two stage turn-on output to achieve the desired di/dt switching level of IGBT. Voltage feedback provides accurate volt x second measurement.

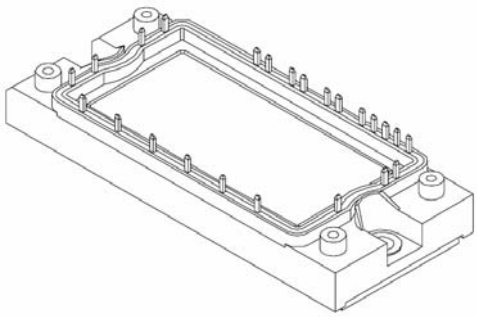

ECONO2 PIM

For further technical information see the IR22381Q datasheet at http://www.irf.com.

The power module

IRMD22381Q demo board is ECONO2-PIM compatible with standard pin out.

Important Notice

IRMD22381Q demo board is supplied with a tentative Bill of Material suitable for a 1200V/10A@100C power module. The BOM presented on page 15 provides a suggestion for the above mentioned power module.
It is strongly recommended to customize the demo board to fit the application requirements for the power module that has been chosen.
Suggestions on passive sizing are also available in DT04-4 at http://www.irf.com.

BOARD CONNECTORS

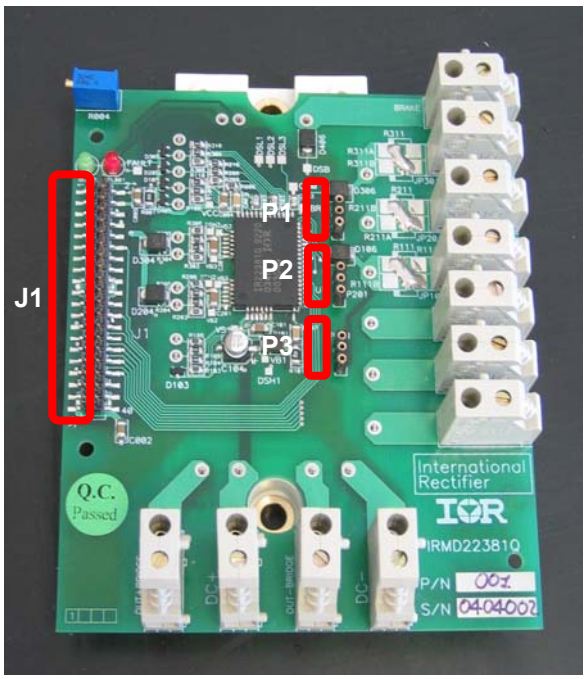

Figure 1: TOP image of board

Connection with the system controller

On board there is a 40 pins connector for the control signals. The driver board uses 26 pins. The remaining pins are for the sensing board (IRCS2277S) that can be connected on top of IRMD22381Q board.

Table 1: 40-pin connector J1

HINU/N	1		2	**LINU**
			4	**5V**
FAULT/N	5		6	**SD**
			8	**BRIN/N**
			12	**HINV/N**
LINV	13			
VSS	17		18	**VSS**
VSS – RT-	19		20	**VSS**
RT+	21			
			24	**HINW/N**
LINW	25		26	**DCF**
VFHU	29		30	**VFHV**
VFHW	31		32	**VFLU**
VFLV	33		34	**VFLW**
VCC	37		38	**VCC**
VCC	39		40	**VCC**

Input logical signals HINU/N, LINU, HINV/N, LINV, HINW/N, LINW, BRIN/N, SD

These logic inputs are 5V and 3.3 V compatible CMOS I/O ports. The logic signals ending with "/N" are active low. The board is populated with pull-up and pull-down resistors (to 5V supply) in order to keep inputs tied to supplies when controller is still inactive. HINx/N turns on the high side IGBT while LINx the low side. When both HINx/N and LINx of the same phase are active at the same time an internal anti-shot trough circuit turns off the output drivers.

FAULT logic signal

This is an output, open drain, logic signal. The logic signal is active low, tied to connector V_{CC} with a 1kΩ pull-up resistor. It reports the power module fault (IGBT desaturation detection, latched signal) or the V_{CC} undervoltage (unlatched).
On board a red LED (DL2) indicates when the signal is active; Figure 2a shows the connection.

DCF

Dc plus feedback voltage (DCF pin) is connected to a resistor divider tied from DC+ to V_{SS} (DC-) and clamped by a 5V zener. At DC+= 330V, DCF≈1.4V.

RT+ and RT-

RT+ and RT-, thermistor output, are connected to the corresponding RT+, RT- pins of the power module.
Note: RT- is starred to Vss at pin 19 of the J1 connector in the IRMD22381Q PCB.

VFHx and VFLx

Voltage feedback outputs from IRMD22381Q

Note: further information about IR22381Q I/Os are described in details in IR22381Q datasheet.

V_{CC} supply pin

This is the supply pin for all the devices. On board a green LED (DL1) indicates the supply power on; Figure 2b shows the connection.

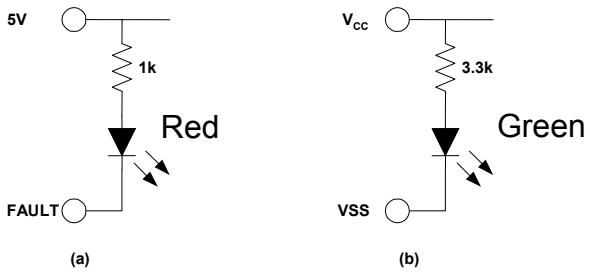

Figure 2: LED connection

V_{SS} ground pin (GND)

The board ground is connected to the power module DC- pin. The V_{SS} pin of the connector and the devices ground pin are star-connected to the DC- pin. DC- star connection has been chosen to reduce the noise coupled from the floating signals.

5V

5V input supply for FAULT, VFx and inputs pull-ups.

Connecting the current sensors

P1, P2 and P3 are connected with the optional shunt resistors placed on the phase output nodes.

CONNECTOR P1		
SHU+ (motor side)	1	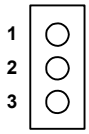
SHU- (power module side)	2	
U	3	
CONNECTOR P2		
SHV+ (motor side)	1	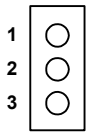
SHV- (power module side)	2	
V	3	
CONNECTOR P3		
SHW+ (motor side)	1	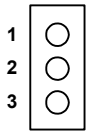
SHW- (power module side)	2	
W	3	

Table 2: P1, P2 and P3 connectors for Kelvin contacts to shunt signals

SHU, SHV and SHW are sense pins connected to the shunt resistors terminals.

High power signal connector

There connectors dedicated to each power signal (DC+, DC-, OUT+BRIDGE, OUT-BRIDGE, U, V, W). Each single connector has 25 Ampere of maximum nominal dc current. DC_{bus} traces are both on top and on other internal layers of the PC board in order to reduce power dissipation. Connectors, DC-bus, phase and ground wires can be soldered directly on board using the corresponding pads located under the power connectors (to be removed).

Connecting the power module

The board is fully compatible with the ECONO2-PIM power module. The following table shows the module pin-out.

CONNECTION POINTS BETWEEN BOARD AND MODULE	
1	U bridge
2	V bridge
3	W bridge
4	Phase U
5	Phase V
6	Phase W
7	BRAKE – Brake IGBT drain output
8	RT+ - thermistor positive pin

9	RT- - thermistor negative pin
10	DC-SENSE phase U, V, W - low side IGBT emitter
11	VGLW - phase W - low side IGBT gate
12	VGLV - phase V - low side IGBT gate
13	VGLU - phase U - low side IGBT gate
14	VGBR - brake IGBT gate
15	VEHW - phase W - high side IGBT emitter
16	VGHW - phase W - high side IGBT gate
17	VEHV - phase V - high side IGBT emitter
18	VGHV - phase V - high side IGBT gate
19	VEHU - phase U - high side IGBT emitter
20	VGHU - phase U - high side IGBT gate
21	OUT+BRIDGE – input rectifier positive output
22	DC+
23	OUT-BRIDGE – input rectifier negative output
24	DC- (GND)

Table 3: High power module connection

Test Points

Test points on board provide signals that are not available at the connectors. See the following table:

ONE FOR EACH CHANNEL (CH1 → U, CH2 → V, CH3 → W)	
$V_{B1,2,3}$	High side floating supply voltage
$V_{S1,2,3}$	High side floating supply offset voltage
$DSH_{1,2,3}$	High side desat input voltage
$DSL_{1,2,3}$	Low side desat input voltage
OTHER	
FAULT	Fault and Shut Down (or-wired)
DSB	Brake desat input voltage
BR	Brake IGBT gate
V_{CC}	Low side and logic fixed supply voltage
GND	Device V_{SS}
COM	DC-SENSE – common low side emitter voltage

Table 4: Test points

TEST BENCH CONNECTION

IRMD22381Q does NOT provide opto isolation.

The following picture shows the recommended connections for board evaluation. Bold lines are equipotential (DC-=Vss=gnd).

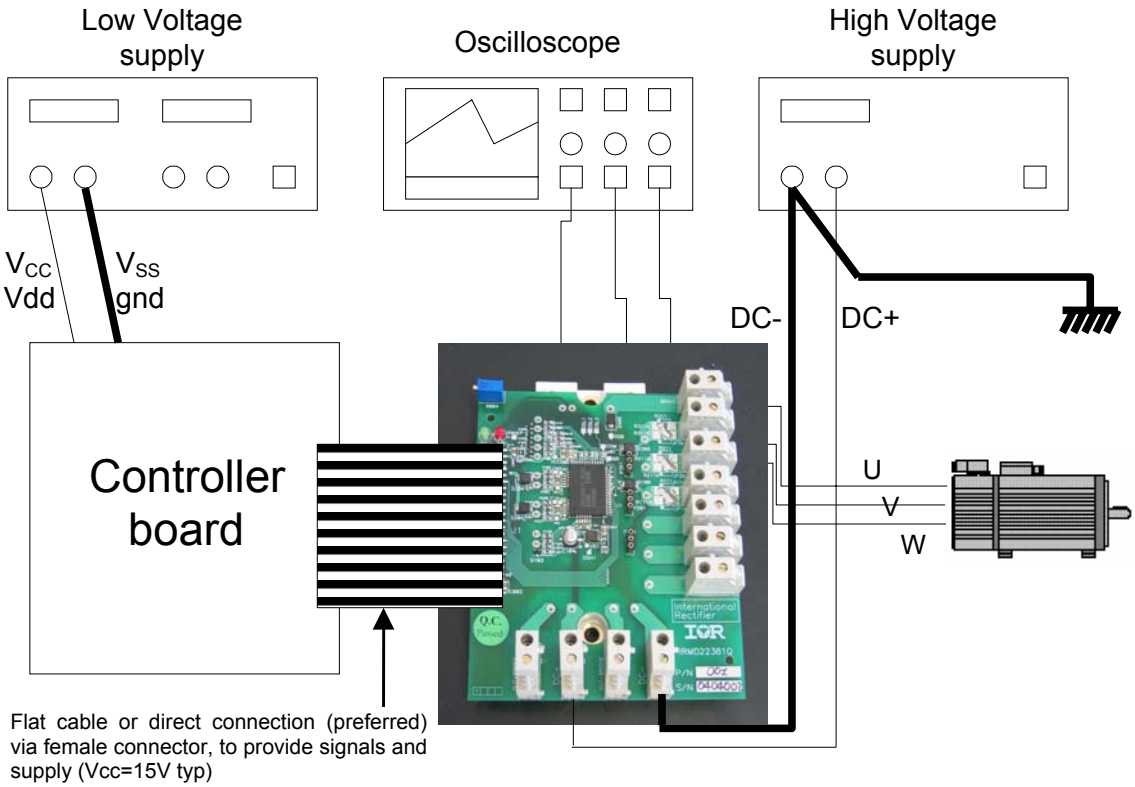

Figure 3: Test bench connection

OPERATING DESCRIPTION

Normal operating mode

In the normal operating mode when HIN/N or LIN is active the high or low side IGBT turns on respectively. Turn on and turn off propagation delays and the propagation delay matching are specified in the IR22381Q datasheet. Devices introduce also the deadtime which is programmable (see product datasheet for details).

Fault management

The IR22381Q is able to detect the excessive current increase by monitoring the IGBT desaturation.
The fault management procedure starts when one of the drivers senses the IGBT desaturation.
The procedure is totally managed by an integrated FAULT LOGIC block without the controller assistance.

Multilevel board solution

With the optional shunt resistor the IRMD22381Q driver board can be connected with the IRCS2277S current sensing board through J1 and P1, P2, and P3 connectors. More information is available in IRCS2277S demo board data sheet.

Precharge of the bootstrapped sections

High voltage gate driver outputs are supplied by bootstrap topology technique.
It's recommended to precharge the bootstrap supplies before starting to drive the motor with the preferred driving scheme.

BOARD CUSTOMIZATION

This demo board is meant to be flexible for self-customization. Place for many spare components allow verifying functionality of the gate driver under different external configurations.
This section will go through the possible customizations of the board.

Bootstrap circuit

The high side floating supply (V_{BS}) is provided by a bootstrap capacitor. Figure 4 shows the circuit on board.

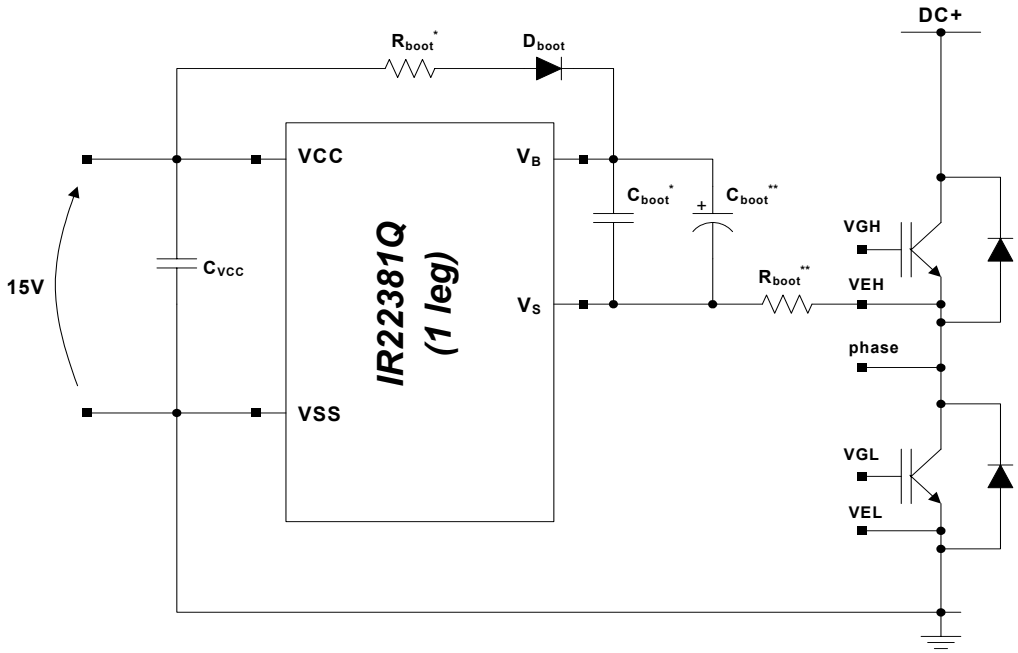

Figure 4: Bootstrap circuit

The following table shows the names of these components on board.

	U	V	W
C_{VCC}	C004	C004	C004
C_{boot}*	C101	C201	C301
C_{boot}**	C104	C204	C304
R_{boot}*	R101	R201	R301
R_{boot}**	R106	R206	R306

Gate resistances

The following table shows the names of gate resistances on board.

	U	V	W
high side gate to HOP	R103	R203	R303

high side gate to HOQ	R104	R204	R304
high side gate to HON	R105	R205	R305
low side gate to LOP	R108	R208	R308
low side gate to LOQ	R109	R209	R309
low side gate to LON	R110	R210	R310
brake gate to BR	R408		

OTHER EXTRA COMPONENTS

These components are provided to make IRMD22381Q board as customizable as possible. In many cases the use of the extra components is not necessary.

Desat circuit

The IR22381Q is able to detect the IGBT desaturation. To reject the noise on the desat pins the IR22381Q have an internal filter of 1µsec. If this is not enough an RC filter has been placed on board (see figure 8, R_{DSH}, C_{DSH} and R_{DSL}, C_{DSL}).

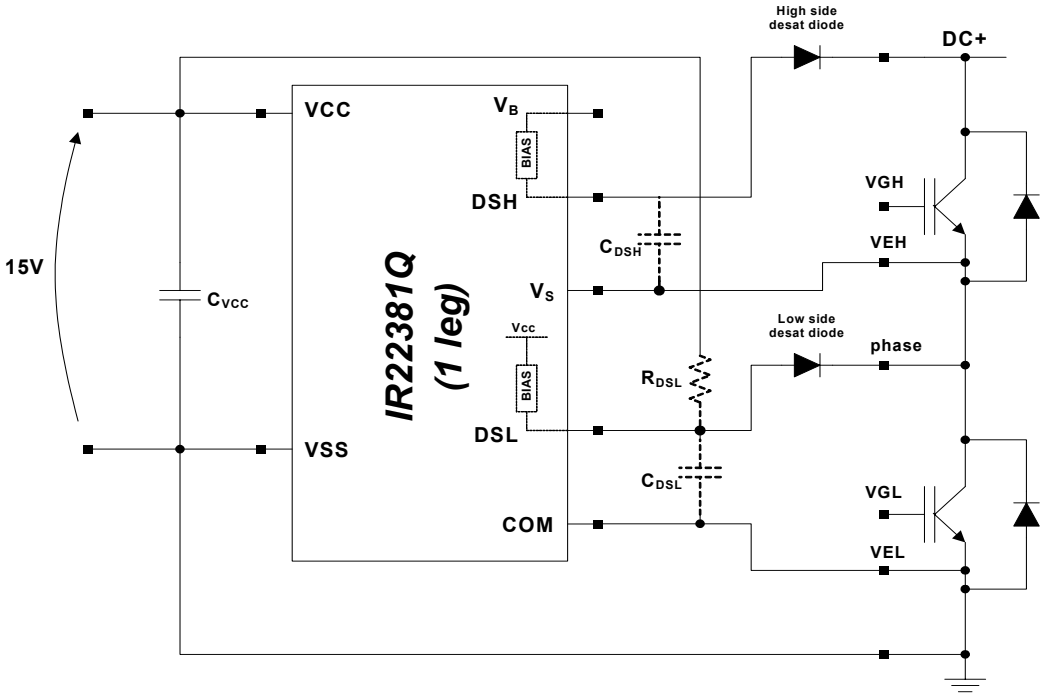

Figure 5: Desat external filter

External C filter (R is provided internally~100Kohm) delays desaturation detection, that causes a delay in turning the IGBT off. Consider this delay when sizing the soft-shut-down resistors.
The following table shows the names of these components on board.

	U	V	W
C_{DSH}	C102	C202	C302
C_{DSL}	C103	C203	C303
C_{DSB}	C403		

Clamping Diode for Vs below ground

This solution preserves the device when the V_S pin goes below ground out of the device absolute maximum ratings. The V_S voltage is clamped to the maximum value allowed by a zener diode.

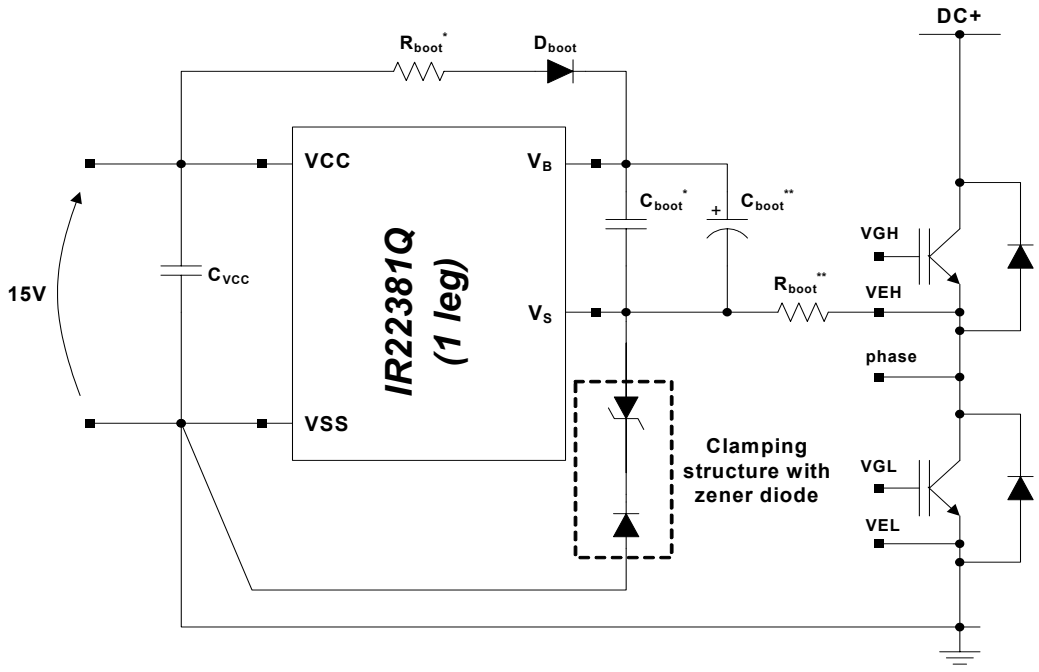

Figure 6: -V_s clamp

The following table shows the names of these components on board.

	U	V	W
DIODE	D104	D204	D304
ZENER	Z102	Z202	Z302

RC filter on COM pin

An RC filter (R_{COM}, C_{COM}) is provided to preserve the IC device from low side IGBT emitter undervoltage spikes.

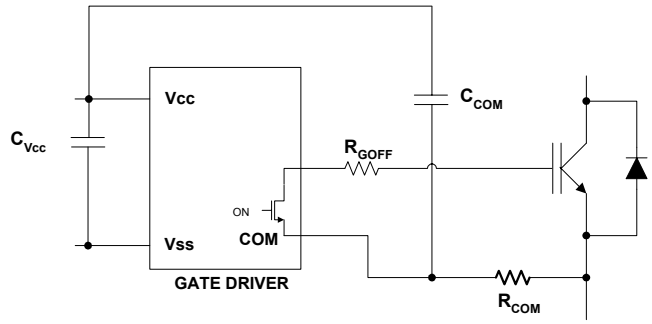

Figure 7: COM below ground protection

The following table shows the names of these components on board.

	U, V, W
C_{COM}	C101
R_{COM}	R006

Fast diode between gate and supply pin

On all low and high side drivers a fast diode is provided to clamp the gate coming over the V_{CC} or V_B supply pins and to recover the current coming from the collector node through the gate-collector capacitance.

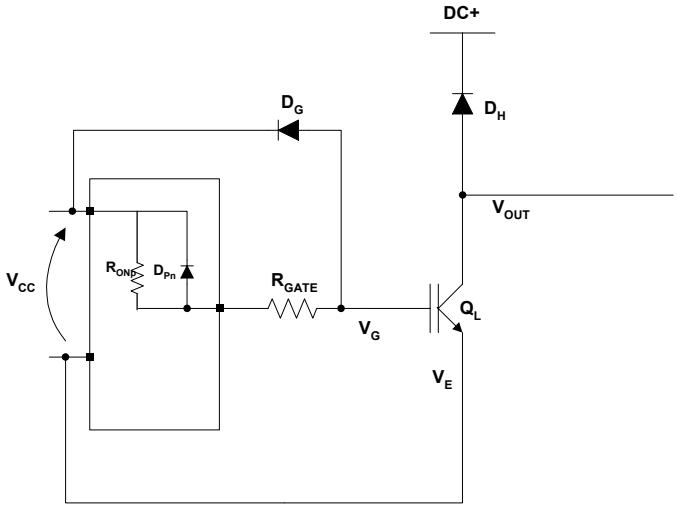

Figure 8: Collector-Gate current protection

The following table shows the names of these components on board.

	U	V	W
(high side) D_G	D103	D203	D303
(low side) D_G	D105	D205	D305
(brake) D_G	D405		

Zener diode to preserve the IGBT gate

To avoid a V_{GE} increasing over the absolute maximum rating a zener diode is connected between gate and emitter pins on all the IGBTs.

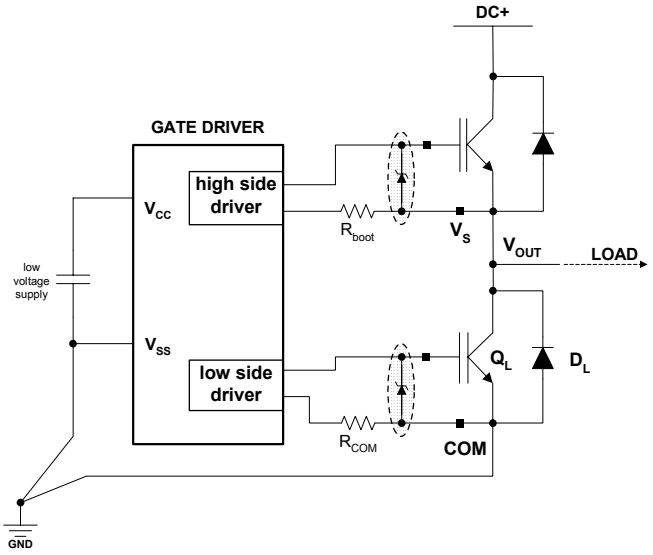

Figure 9: Zener clamp for IGBT gate

The following table shows the names of these components on board.

	U	V	W
(high side) ZENER	Z101	Z201	Z301
(low side) ZENER	Z103	Z203	Z303
(brake) ZENER	Z403		

Optional output shunt resistor

Two type of output shunt resistor, for current sensor, are possible see the following table:

	U	V	W
TO220 or	R111	R211	R311
OARS-1	R111A // R111B	R211A // R211B	R311A // R311B

The OARS-1 type (A and B) are connected in parallel.

Resistor on v_{cc}

Provided to decouple V_{CC} from supply line.

	U, V, W
Vcc decoupling	R001

BILL OF MATERIAL

The hereafter provided BOMs represent a suggestion based on the IGBT characteristics shown below.

V_{CES} = 1200V

I_C = 10A, T_C=80°C

t_{sc} > 10µs, T_J =150°C

$V_{CE(on)}$ typ. = 2.68V

Electrical Characteristics @ T_J = 25°C (unless otherwise specified)

		Parameter	Min.	Typ.	Max.	Units	Conditions
Inverter IGBT	$BV_{(CES)}$	Collector-to-Emitter Breakdown Voltage	1200	–	–	V	V_{GE} = 0V, I_C = 500µA
	$\Delta V_{(BR)CES}/\Delta T_J$	Temp. Coefficient of Breakdown Voltage	-	1.33	-	V/°C	V_{GE} = 0V, I_C = 1mA (25°C-125°C)
	$V_{CE(ON)}$	Collector-to-Emitter Voltage	-	2.68	3.10	V	I_C =10A V_{GE} =15V
			-	3.68	4.8		I_C =20A V_{GE} =15V
			-	3.19	3.74		I_C =10A V_{GE} =15V T_J =125°C
			-	4.53	5.40		I_C =20A V_{GE} =15V T_J =125°C
	VGE(th)	Gate Threshold Voltage	4	-	6		V_{CE} = V_{GE} I_C=250µA
	ΔVGE(th)	Thresold Voltage temp. coefficient	-	9.7	-	mV/°C	V_{CE} = V_{GE} I_C=1mA (25°C-125°C)
	I_{CES}	Zero Gate Voltage Collector Current	-	-	100	µA	V_{GE} = 0V V_{CE}=1200V
			-	750	-		V_{GE} = 0V V_{CE}=1200V T_J=125°C
	I_{GES}	Gate-to-Emitter Leakage Current	-	-	200	nA	V_{GE} = ±20V
	Q_G	Total Gate Charge (turn-on)	-	75	-	nC	I_C =10A
	Q_{GE}	Gate-to-Emitter Charge (turn-on)	-	32	-		V_{CC} =600V
	Q_{GC}	Gate-to-Collector Charge (turn-on)	-	10	-		V_{GE} =15V
	E_{ON}	Turn-On Switching Loss	-	0.96	-	mJ	I_C =10A V_{CC} =600V
	E_{OFF}	Turn-Off Switching Loss	-	0.46	-		V_{GE} =15V R_G =22 Ω L =500µH
	E_{TOT}	Total Switching Loss	-	1.42	-		T_J =25°C [3]
	E_{ON}	Turn-On Switching Loss	-	1.44	-	mJ	I_C =10A V_{CC} =600V
	E_{OFF}	Turn-Off Switching Loss	-	0.74	-		V_{GE} =15V R_G =22 Ω L =500µH
	E_{TOT}	Total Switching Loss	-	2.18	-		T_J =125°C [3]
	$t_{d(on)}$	Turn-On delay time	-	86	-	ns	I_C =10A V_{CC} =600V
	t_r	Rise time	-	20	-		V_{GE} =15V R_G =22 Ω L =500µH
	$t_{d(off)}$	Turn-Off delay time	-	110	-		
	t_f	Fall time	-	240	-		
	C_{ies}	Input Capacitance	-	750	-	pF	V_{GE} =OV
	C_{oes}	Output Capacitance	-	100	-		V_{CC} =30V
	C_{res}	Reverse Transfer Capacitance	-	27	-		f =1Mhz
	RBSOA	Reverse Bias Safe Operating Area	FULL SQUARE				T_J =150°C I_C =20A R_G =22 Ω V_{GE} =15V to 0V
	SCSOA	Short Circuit Safe Operating Area	10	-	-	µs	T_j=150°C V_{CC} =900V V_P =1200V R_G =22 Ω V_{GE} =15V to 0V

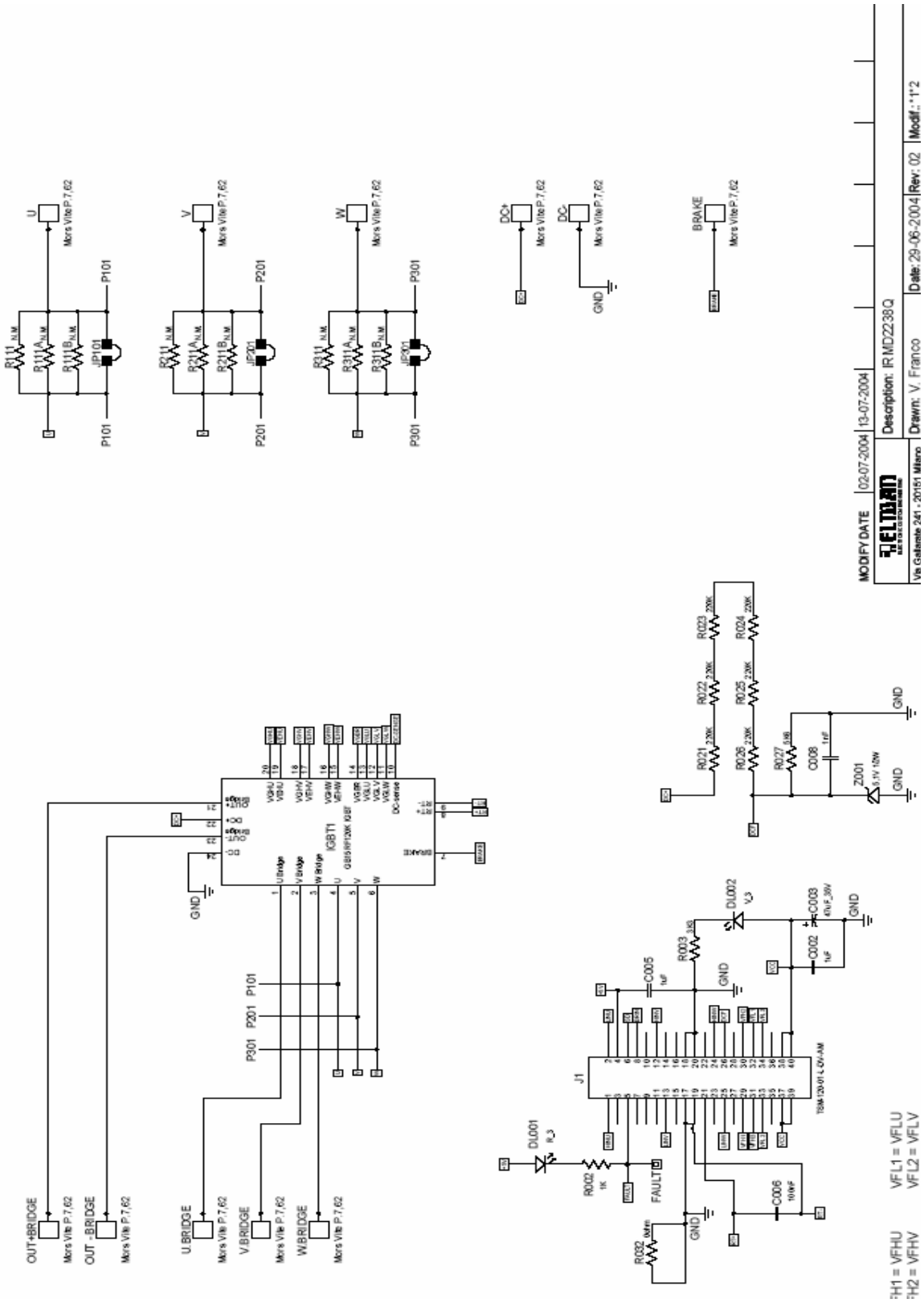
MODIFY DATE
02-07-2004
13-07-2004
Description: IRMD22381Q
Drawn: V. Franco
Date: 29-06-2004
Rev: 02
Modif.: *1*2
Via Galante 241 - 20151 Milano
U
V
W
DC+
DC-
BRAKE
P101
P201
P301
GND
IGBT1
J1
OUT+BRIDGE
OUT - BRIDGE
U.BRIDGE
V.BRIDGE
W.BRIDGE
FAULT
VFL1 = VFLU
VFL2 = VFLV

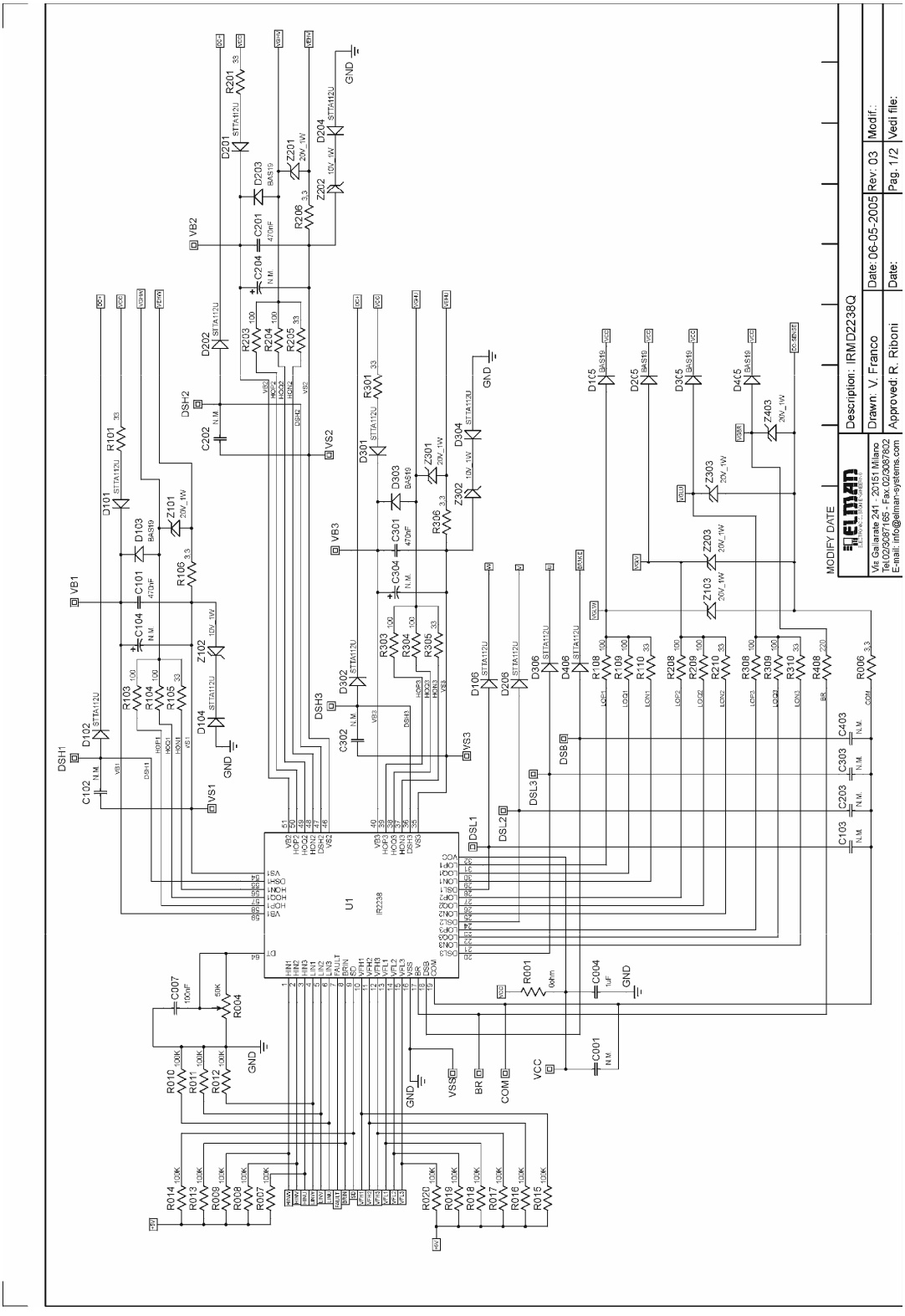
MODIFY DATE
Description: IRMD2238Q
Drawn: V. Franco
Date: 06-05-2005
Rev: 03
Modif.:
Approved: R. Riboni
Date:
Pag. 1/2
Ved file:
ELMAN
Via Gallarate 241 - 20151 Milano
Tel.02/3087165 - Fax.02/3087802
E-mail: info@elman-systems.com
U1
IR2238
VB1
VB2
VB3
VS1
VS2
VS3
VCC
VSS
BR
COM
GND
DSH1
DSH2
DSH3
DSL1
DSL2
DSL3
DSB

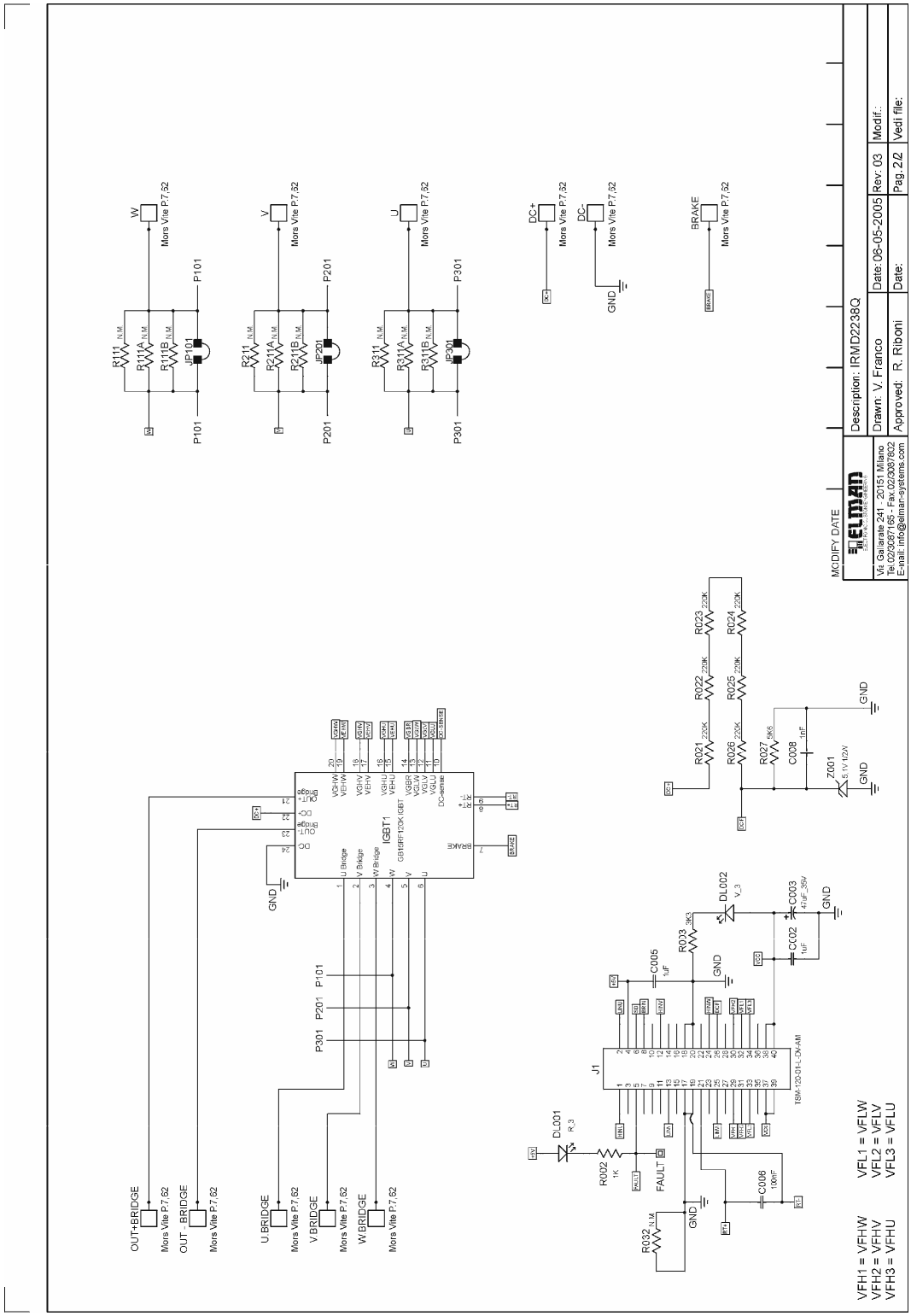
Description: IRMD2238Q
Drawn: V. Franco
Date: 06-05-2005
Rev: 03
Modif.:
Approved: R. Riboni
Date:
Pag. 2/2
Vedi file:
MODIFY DATE
Via Gallarate 241 - 20151 Milano
Tel. 02/3087165 - Fax. 02/3087802
E-mail: info@elman-systems.com
VFH1 = VFHW
VFH2 = VFHV
VFH3 = VFHU
VFL1 = VFLW
VFL2 = VFLV
VFL3 = VFLU
IGBT1
GB15RF120K IGBT
J1
TSM-120-01-L-DV-AM
OUT+BRIDGE
OUT - BRIDGE
U.BRIDGE
V.BRIDGE
W.BRIDGE
Mors Vite P.7,62
GND
FAULT
BRAKE
DC+
DC-
P101
P201
P301

LAYOUT

TOP SILK

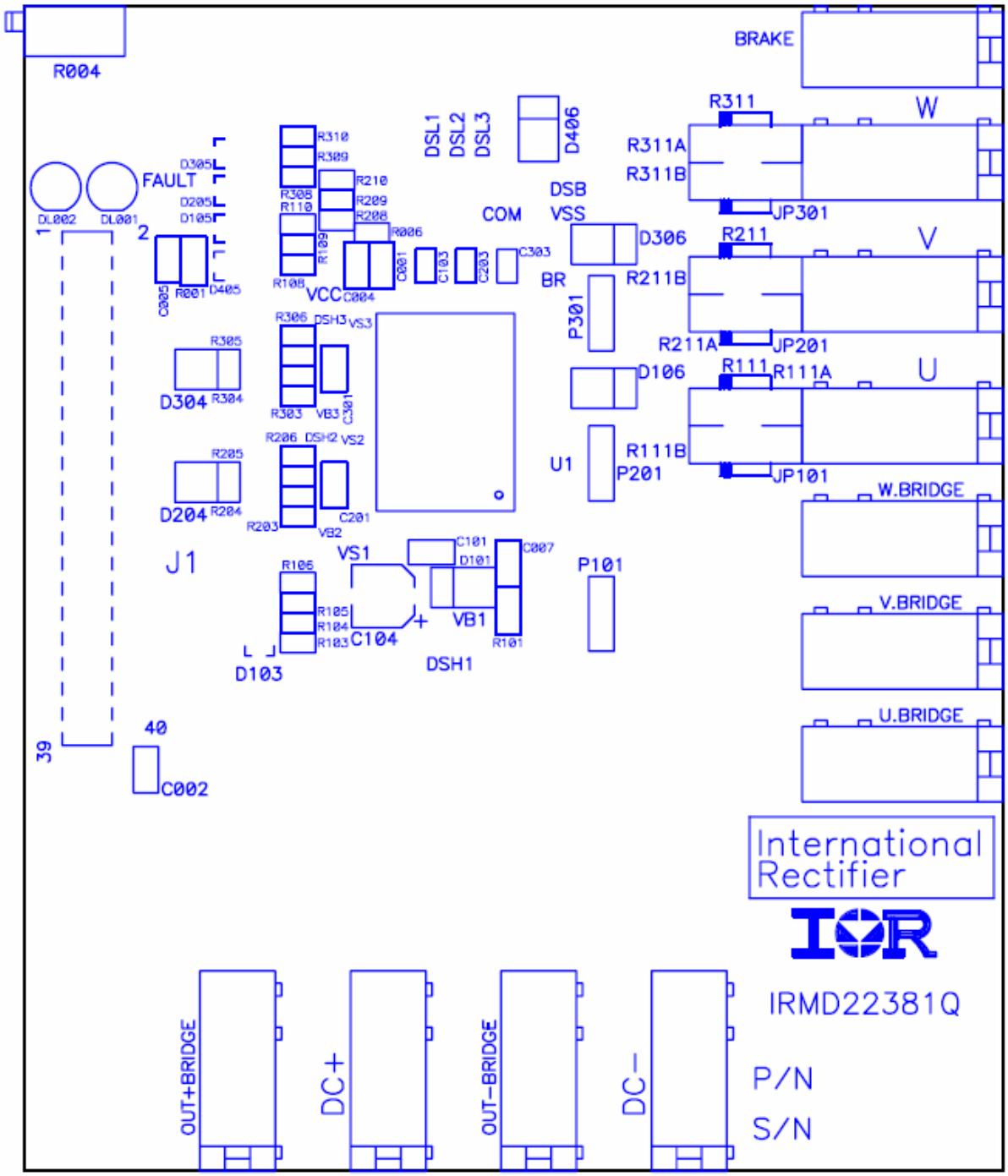

TOP LAYER

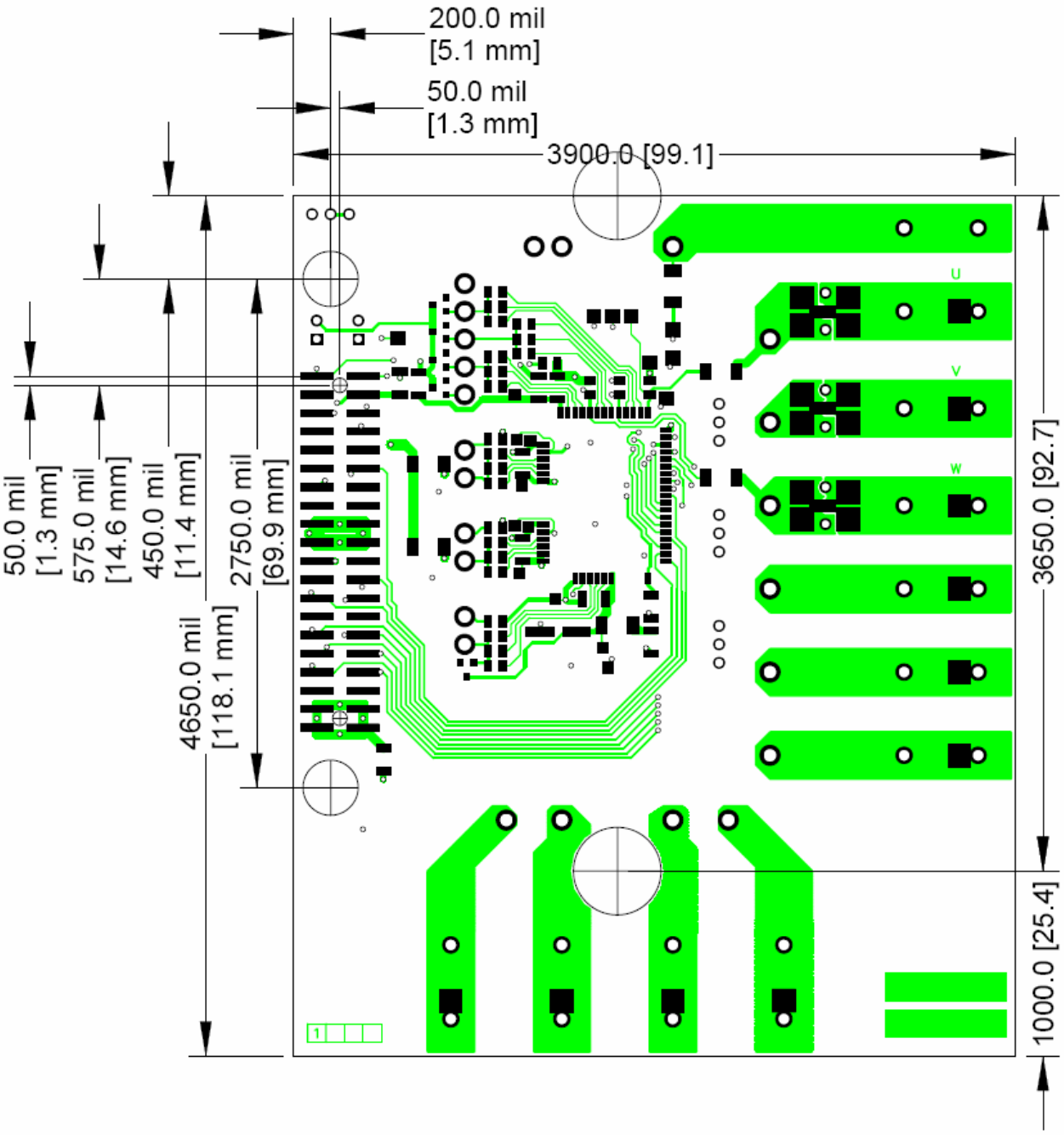
200.0 mil
[5.1 mm]
50.0 mil
[1.3 mm]
3900.0 [99.1]
50.0 mil
[1.3 mm]
575.0 mil
[14.6 mm]
450.0 mil
[11.4 mm]
2750.0 mil
[69.9 mm]
4650.0 mil
[118.1 mm]
3650.0 [92.7]
1000.0 [25.4]
U
V
W

INT1 LAYER

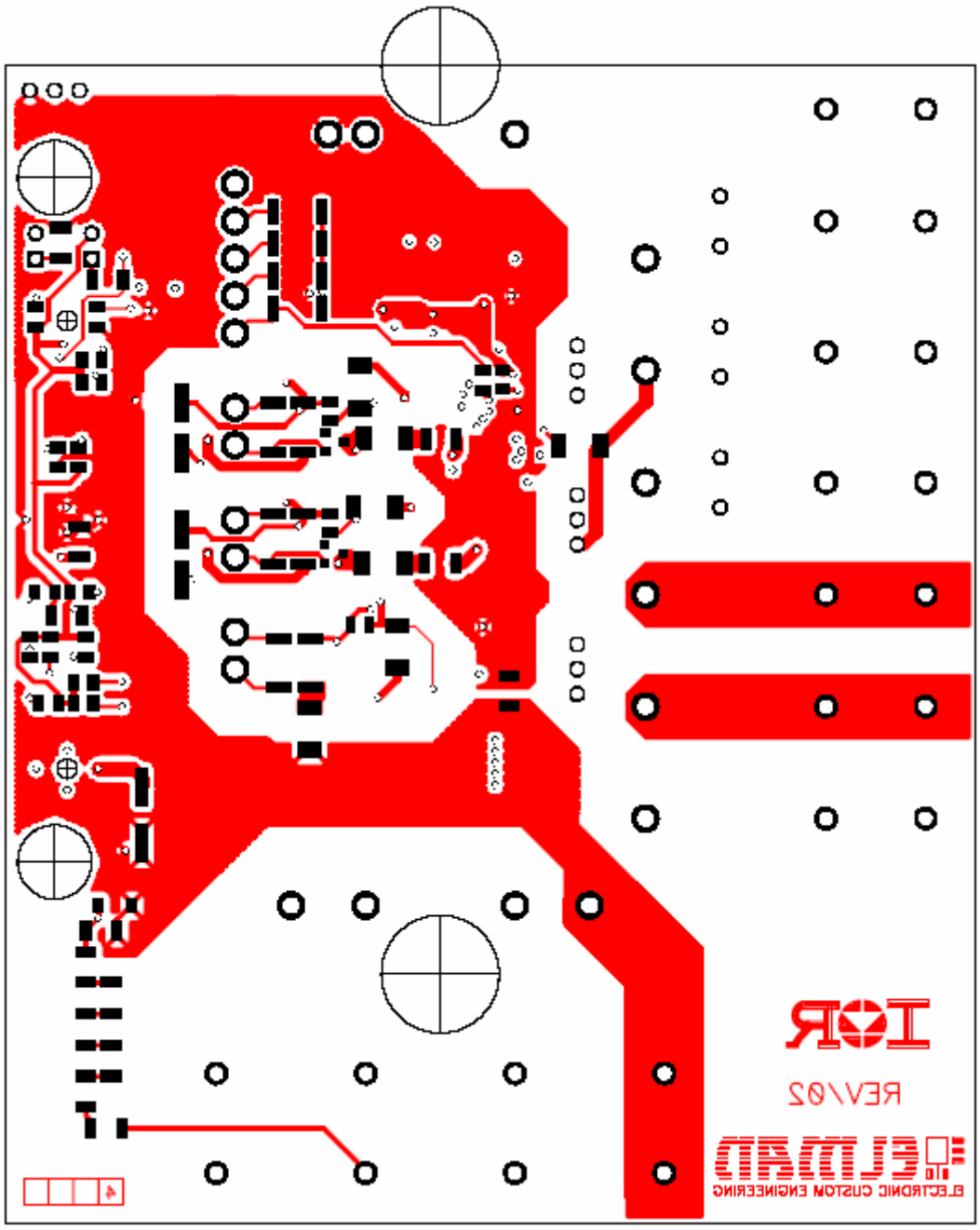

INT2 LAYER

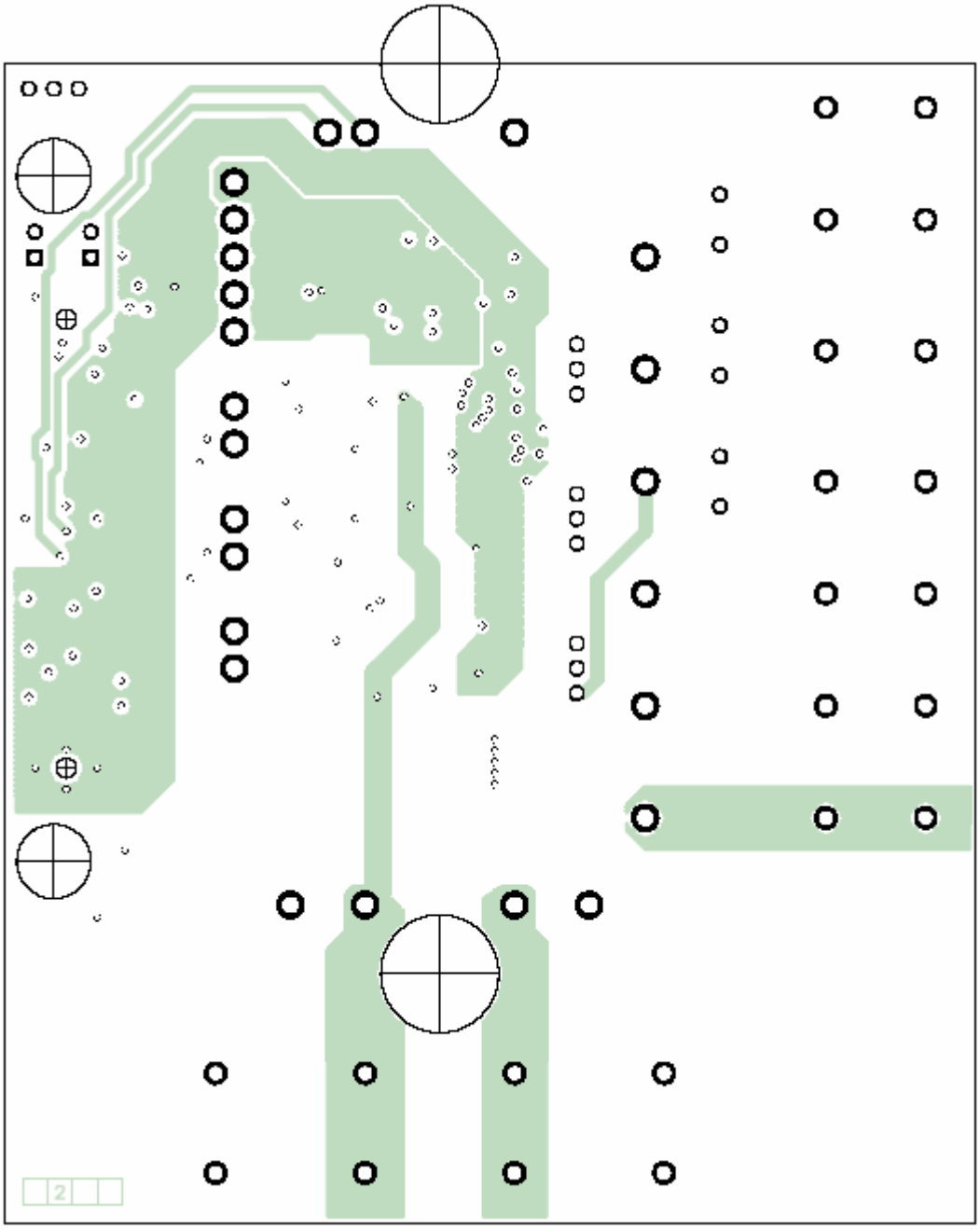

BOT LAYER

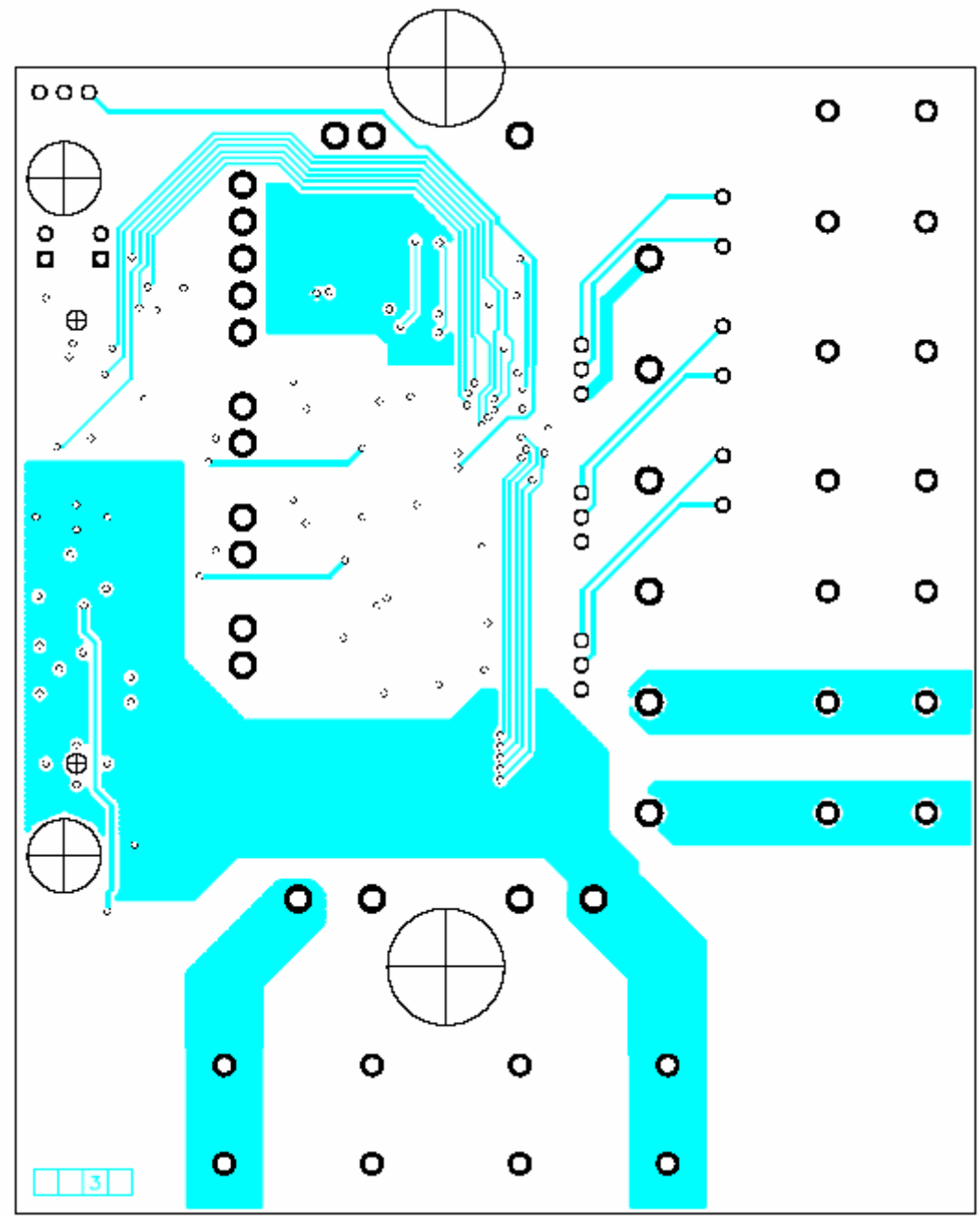
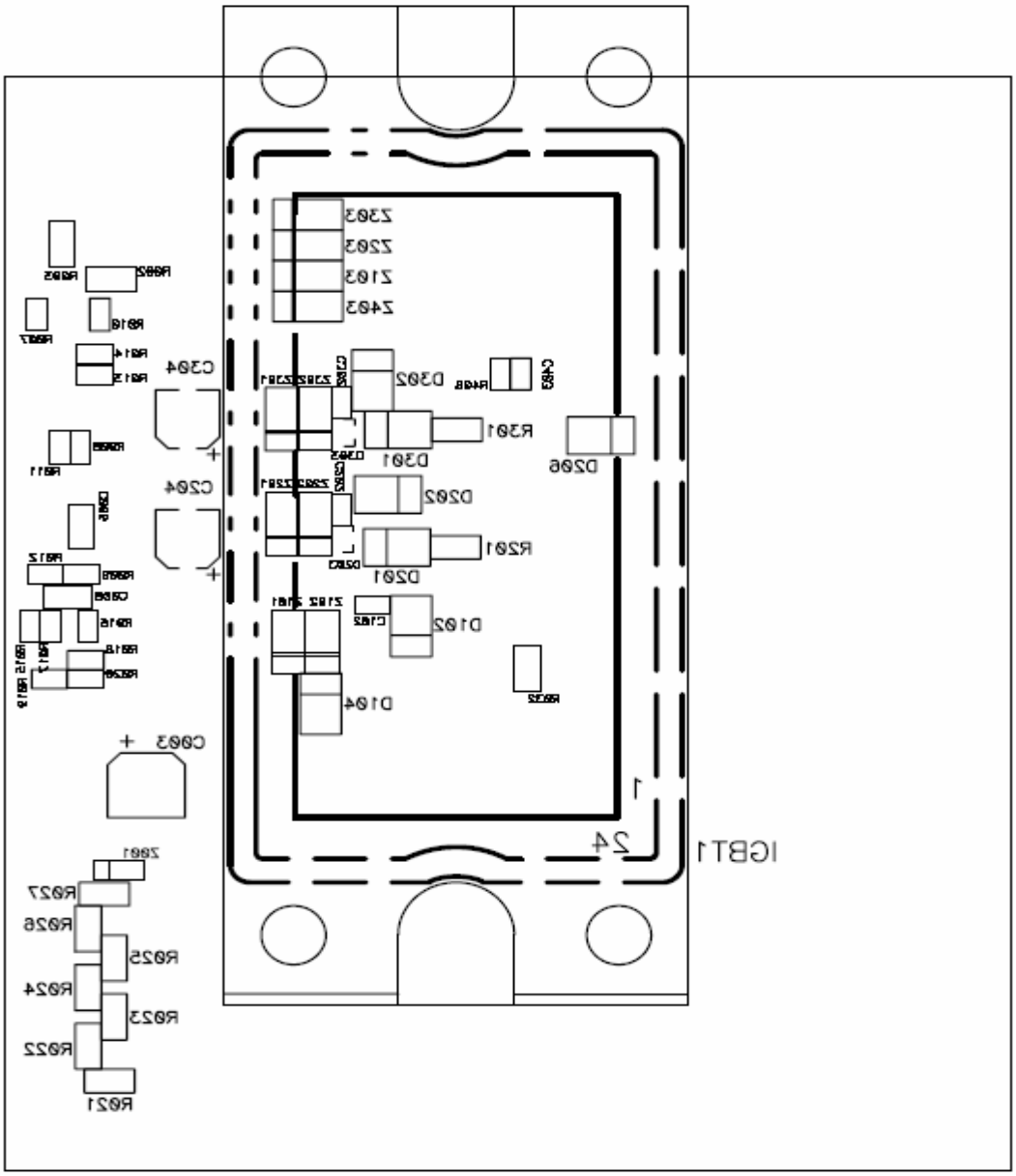
BOT SILK