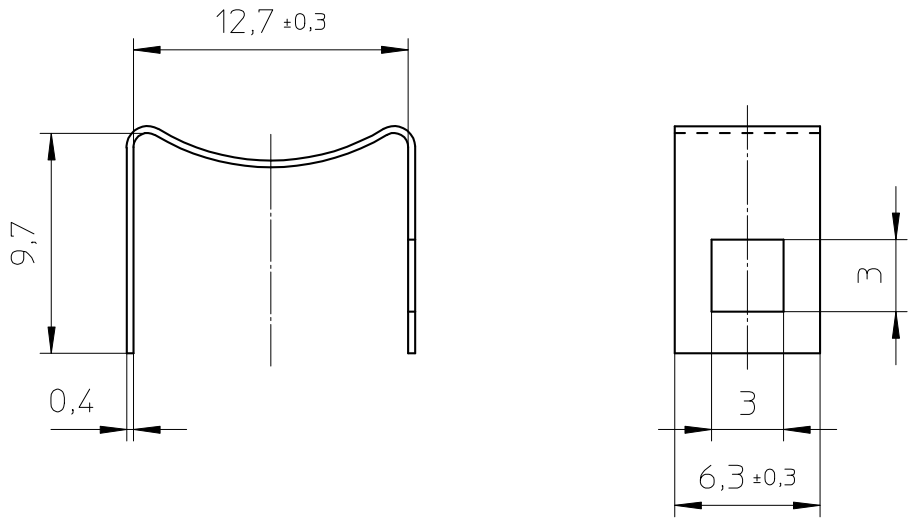

Material: Nickel Silver

CLASS.NO.	SPR - EP10	4322 021 01471	96-05-07
			96-08-23
			97-03-20
98-11-20			98-11-20
			08-06-17

NAME NAAM	M.Tryngiel	SUPERS. VERV.	1	SH BL. SH BL. 112	– 001	010		A4
MPA	CHECK CONTR.	DAT. 96-05-07	Property of Eigendom van	© FERROXCUBE 2000				