2N6576

Dimensions in mm (inches).

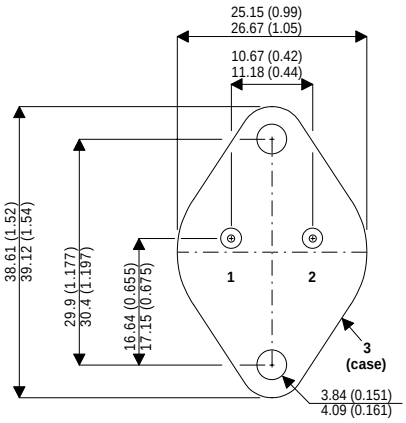

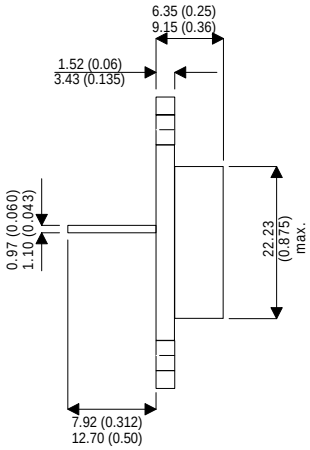

Bipolar NPN Device in a Hermetically sealed TO3 Metal Package.

Bipolar NPN Device.

V_{CEO} = 60V

I_C = 15A

All Semelab hermetically sealed products can be processed in accordance with the requirements of BS, CECC and JAN, JANTX, JANTXV and JANS specifications.

TO3 (TO204AA)

PINOUTS

1 – Base 2 – Emitter Case - Collector

Parameter	Test Conditions	Min.	Typ.	Max.	Units
V_{CEO}*				60	V
$I_{C(CONT)}$				15	A
h_{FE}	@ 3/10 (V_{CE} / I_C)	500		5000	-
f_t			200M		Hz
P_D				120	W

* Maximum Working Voltage

This is a shortform datasheet. For a full datasheet please contact sales@semelab.co.uk.

Semelab Plc reserves the right to change test conditions, parameter limits and package dimensions without notice. Information furnished by Semelab is believed to be both accurate and reliable at the time of going to press. However Semelab assumes no responsibility for any errors or omissions discovered in its use.

Semelab plc. Telephone +44(0)1455 556565. Fax +44(0)1455 552612.

E-mail: sales@semelab.co.uk Website: http://www.semelab.co.uk

Generated
31-Jul-02