REVISION J

DO NOT SCALE FROM THIS PRINT

ASO ONLY (APPLICATION SPECIFIC ORDER)

FIG. 1

QSH-060-01-X-D-DP-EMX SHOWN

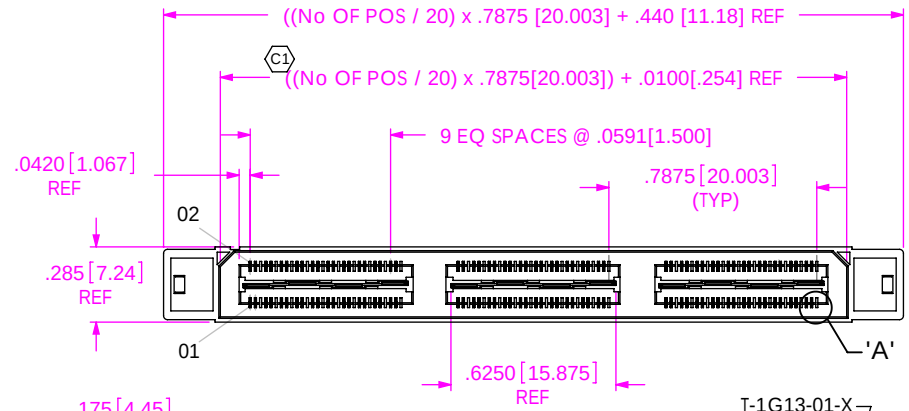

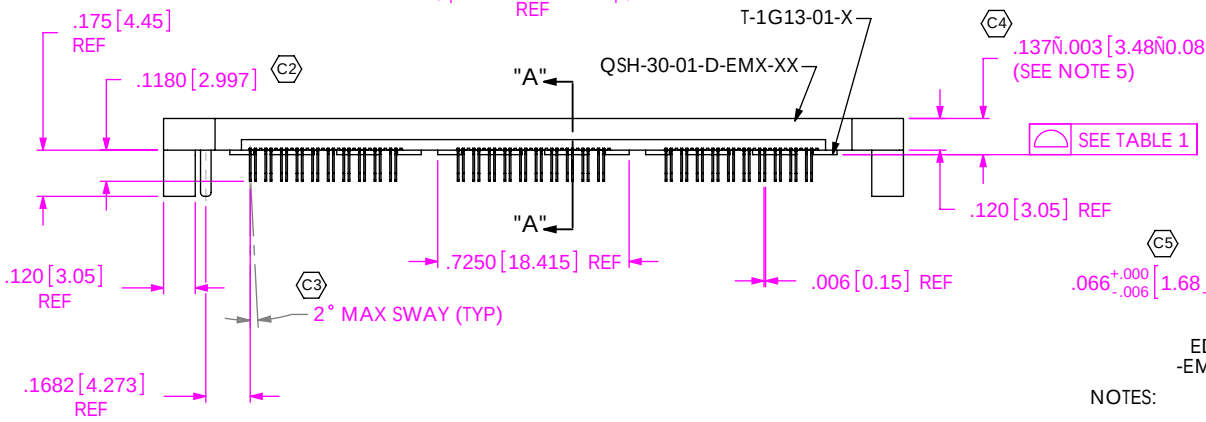

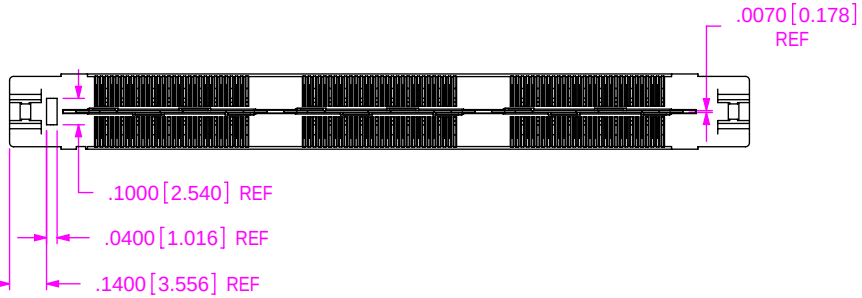

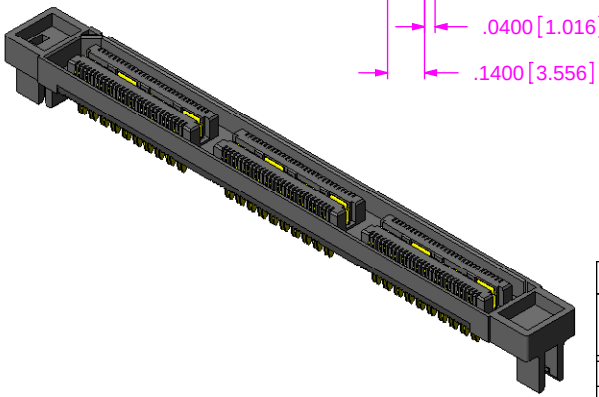

QSH-XXX-01-X-D-DP-EMX

No OF PAIRS
-020, -040, -060,
* -080, *-100
(PER ROW)
* SEE NOTE 11

LEAD STYLE
-01: .1380[3.505]

PLATING SPECIFICATION
-F: FLASH SELECTIVE GOLD, MATTE TIN TAIL (USE C-162-XX-F & T-1G13-01-F) (SEE NOTE 6)
J -L: LIGHT SELECTIVE GOLD, MATTE TIN TAIL (USE C-162-XX-L & T-1G13-01-L)
-H: HEAVY GOLD (USE C-162-XX-H & T-1G13-01-G)

DIFFERENTIAL PAIR

ROW SPECIFICATION
-D: DOUBLE (USE QSH-30-01-D-EMX-XX)

No OF BANKS

EDGE MOUNT THICKNESS
-EM2: .064[1.63] +/-.004 PCB (USE QSH-30-01-D-EM2-XX & C-162-01-X)
-EM3: (USE QSH-30-01-D-EM3-XX & C-162-02-X) **SEE NOTE 10**

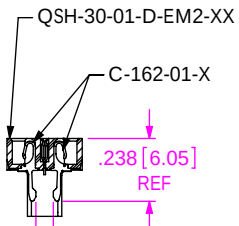

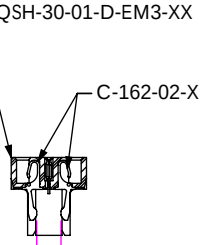

C5 $.066^{+.000}_{-.006}$ [$1.68^{0.00}_{-0.15}$]

C6 $.0920^{+.002}_{-.004}$ [$2.34^{+0.05}_{-0.10}$]

SECTION "A-A"
EDGE MOUNT THICKNESS
-EM2: .064[1.63] +/-.004 PCB

SECTION "A-A"
EDGE MOUNT THICKNESS
-EM3:
SEE NOTE 10
(DIFFERENT AS SHOWN, OTHERWISE SAME AS -EM2 PCB THICKNESS)

NOTES:

1. C REPRESENTS A CRITICAL DIMENSION.
2. CONTACT RETENTION: 6 OZ MIN.
3. GROUND PLANE RETENTION: 8 OZ MIN.
4. PARTS ARE "MOLD TO POSITION".
5. MAX VARIANCE OF .002[.05].
6. J -L PLATING CAN BE SUBSTITUTED FOR -F PLATED SIGNAL PIN.
7. NOTE DELETED.
8. NOTE DELETED.
9. SEE www.samtec.com/processing/edgemt_tectalk/index.htm FOR INFORMATION ON PROCESSING EDGE MOUNT PARTS TO BOARDS.
10. -EM3 IS NOT A STANDARD OFFERING; AVAILABLE AS AN ASP ONLY. PLEASE CONTACT SAMTEC INTERCONNECT PROCESSING GROUP WITH ORDER INQUIRIES.
11. FOR NEW APPLICATIONS REQUIRING THESE POSITIONS, PLEASE CONTACT SAMTEC INTERCONNECT PROCESSING GROUP BEFORE DESIGNING IN.

TABLE 1 (C8)		
No OF PAIRS	ASSEMBLY BOW	GND PLANE COPLANARITY
-020 THRU -060	.004 [.10]	.004 [.10]
-080 THRU -100	.005[1.27]	.005[1.27]

UNLESS OTHERWISE SPECIFIED, DIMENSIONS ARE IN INCHES.
TOLERANCES ARE:
DECIMALS .XX: ±.01[.3] .XXX: ±.005[.13] .XXXX: ±.0020[.051]
ANGLES 2°

PROPRIETARY NOTE
THIS DOCUMENT CONTAINS INFORMATION CONFIDENTIAL AND PROPRIETARY TO SAMTEC, INC. AND SHALL NOT BE REPRODUCED OR TRANSFERRED TO OTHER DOCUMENTS OR DISCLOSED TO OTHERS OR USED FOR ANY PURPOSE OTHER THAN THAT WHICH IT WAS OBTAINED WITHOUT THE EXPRESSED WRITTEN CONSENT OF SAMTEC, INC.

samtec
520 PARK EAST BLVD, NEW ALBANY, IN 47150
PHONE: 812-944-6733 FAX: 812-948-5047
e-Mail: info@SAMTEC.com code: 55322

MATERIAL: DO NOT SCALE DRAWING SHEET SCALE: 1.375:1

INSULATOR: LCP, COLOR: BLACK
CONTACT & GROUND PLANE: PHOS BRONZE

DESCRIPTION: .5mm EDGE MOUNT DIFFERENTIAL PAIR HIGH SPEED SOCKET ASSEMBLY

DWG. NO. QSH-XXX-01-X-D-DP-EMX

F:\DWG\MISC\MKTG\QSH-XXX-01-X-D-DP-EMX-MKT.SLDDRW

BY: DEAN P 5/31/2000 SHEET 1 OF 2

REVISION J

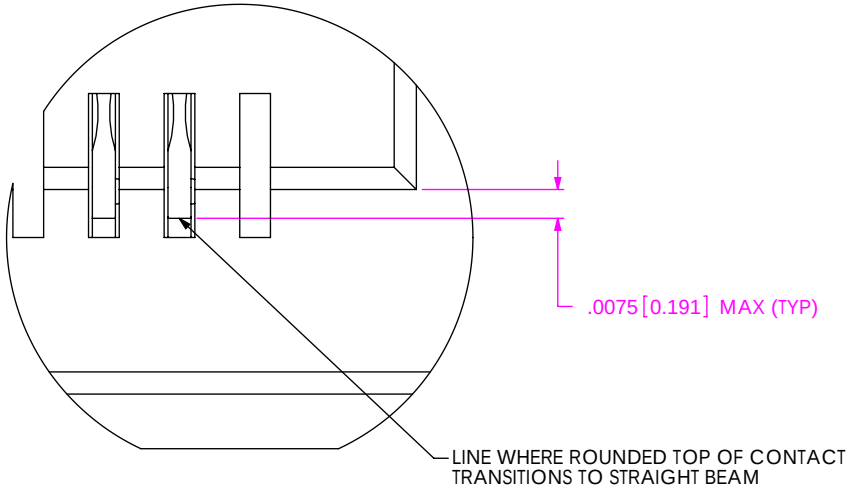

DETAIL 'A'
SCALE 20 : 1

PROPRIETARY NOTE

THIS DOCUMENT CONTAINS INFORMATION CONFIDENTIAL AND PROPRIETARY TO SAMTEC, INC. AND SHALL NOT BE REPRODUCED OR TRANSFERRED TO OTHER DOCUMENTS OR DISCLOSED TO OTHERS OR USED FOR ANY PURPOSE OTHER THAN THAT WHICH IT WAS OBTAINED WITHOUT THE EXPRESSED WRITTEN CONSENT OF SAMTEC, INC.

DO NOT SCALE DRAWING

SHEET SCALE: 4:1

samtec
520 PARK EAST BLVD, NEW ALBANY, IN 47150
PHONE: 812-944-6733 FAX: 812-948-5047
e-Mail: info@SAMTEC.com code: 55322

DESCRIPTION:
.5mm EDGE MOUNT DIFFERENTIAL PAIR HIGH SPEED SOCKET ASSEMBLY

DWG. NO.
QSH-XXX-01-X-D-DP-EMX

BY: DEAN P 5/31/2000 SHEET 2 OF 2

F:\DWG\MISC\MKTG\QSH-XXX-01-X-D-DP-EMX-MKT.SLDDRW