REVISION C

NOTES:

1. Ⓒ REPRESENTS A CRITICAL DIMENSION.
2. MINIMUM PUSHOUT FORCE: 1 LB[4.45N].
3. MAXIMUM ALLOWABLE BOW: .002[.05] INCH/INCH AFTER ASSEMBLY.
4. POST HEIGHT VARIATION BETWEEN ANY TWO PINS: .005[.13].
5. FOR ALL PINS: NO BAND MARKS ALLOWED IN POST AREA.
6. FOR LOCKING CLIPS: .75LB[3.336N] MIN RETENTION.
7. MEASURE AT BEND.
8. MAX PIN ROTATION IN BODY TO BE 2 .

ESHF-1XX-01-X-D-XX-XX

No OF POSITIONS
-02 THRU -25

LEAD STYLE
-01

PLATING SPECIFICATION
-L: LIGHT SELECTIVE
(USE T-1S71-XX-L)
-F: FLASH GOLD SELECTIVE
(USE T-1S71-XX-F)
-S: SELECTIVE GOLD
(USE T-1S71-XX-S)

ROW SPECIFICATION
-D: DOUBLE

BODY HEIGHT
-TH: THROUGH HOLE (SEE FIG. 1, SHT. 1)
-RA: RIGHT ANGLE (SEE FIG. 2, SHT. 2)
-SM: SURFACE MOUNT (SEE FIG. 3, SHT. 3)

OPTION
-LC: LOCKING CLIP
(NOT AVAILABLE WITH -RA)
-K: POLYIMIDE FILM
(-SM ONLY)
(AVAILABLE IN TAPE & REEL ONLY)
-TR: TAPE AND REEL

FIG. 1
(ESHF-110-01-X-D-TH-LC SHOWN)

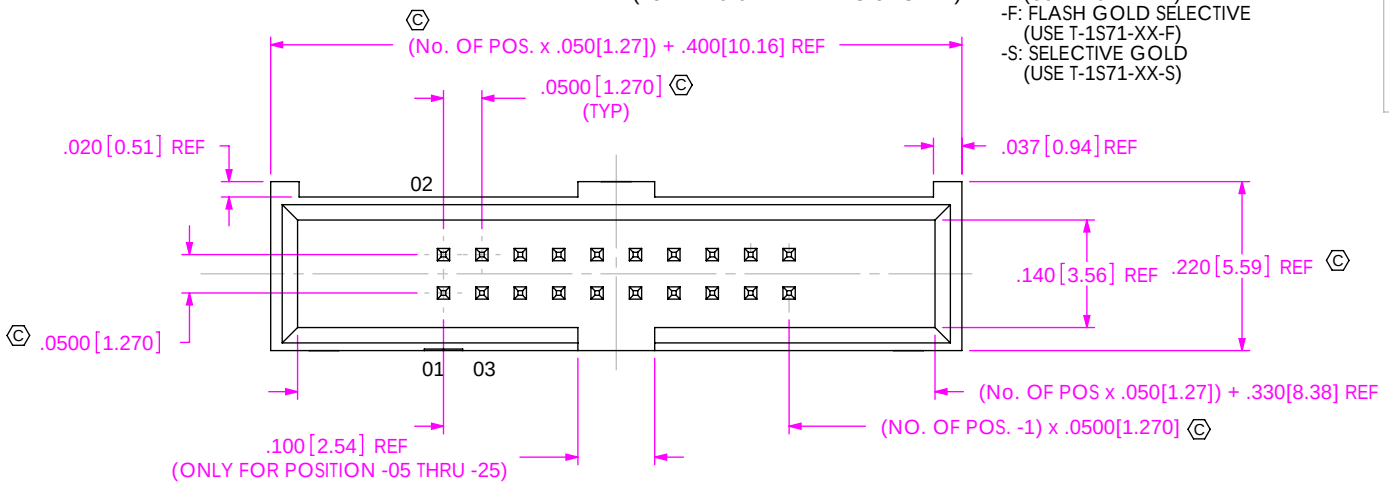

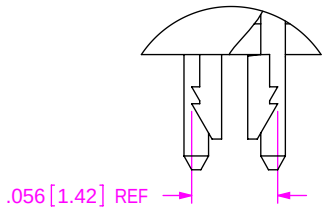

DETAIL 'B'
SCALE 8 : 1

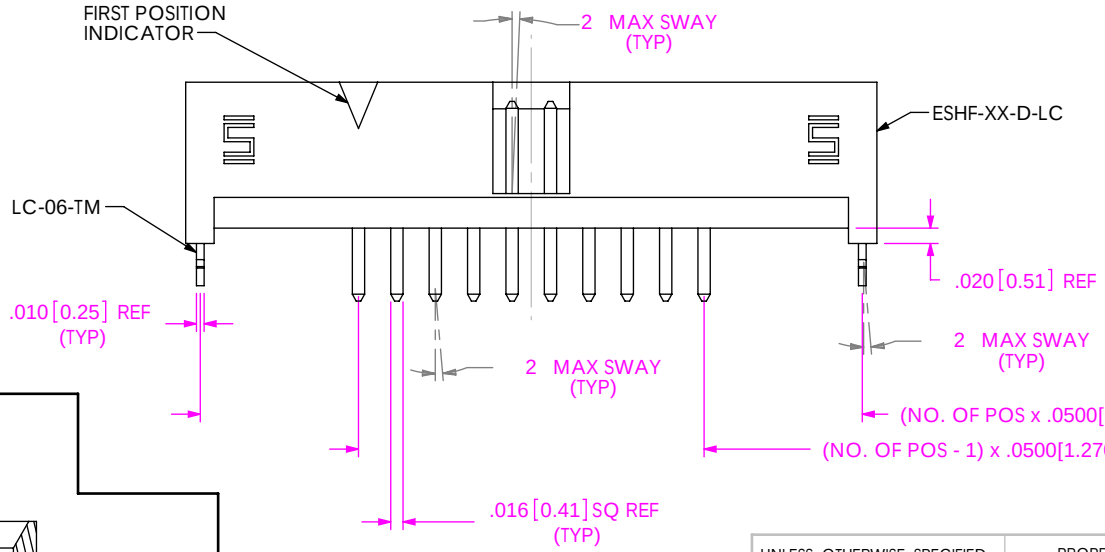

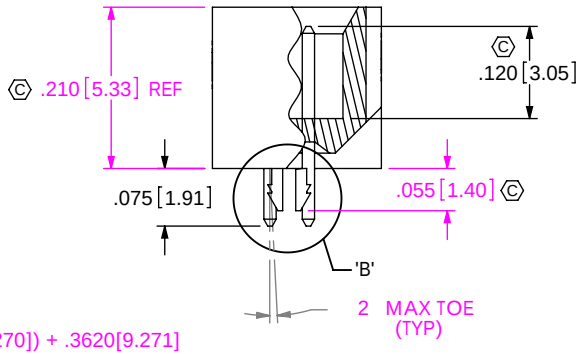

IN-PROCESS 1
(FOR -TH ONLY)

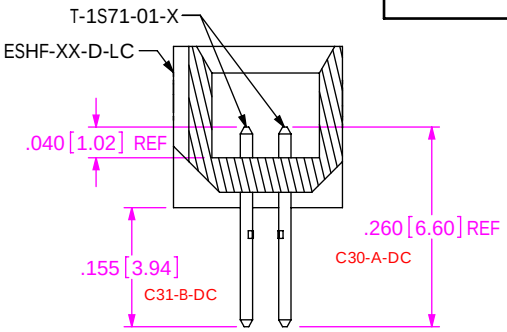

UNLESS OTHERWISE SPECIFIED, DIMENSIONS ARE IN INCHES.
TOLERANCES ARE:

DECIMALS	ANGLES
.XX: .01 [0.3]	2
.XXX: .005 [0.13]	
.XXXX: .0020 [0.051]	

PROPRIETARY NOTE
THIS DOCUMENT CONTAINS INFORMATION CONFIDENTIAL AND PROPRIETARY TO SAMTEC, INC. AND SHALL NOT BE REPRODUCED OR TRANSFERRED TO OTHER DOCUMENTS OR DISCLOSED TO OTHERS OR USED FOR ANY PURPOSE OTHER THAN THAT WHICH IT WAS OBTAINED WITHOUT THE EXPRESSED WRITTEN CONSENT OF SAMTEC, INC.

samtec
520 PARK EAST BLVD, NEW ALBANY, IN 47150
PHONE: 812-944-6733 FAX: 812-948-5047
e-Mail: info@SAMTEC.com code: 55322

MATERIAL: DO NOT SCALE DRAWING SHEET SCALE: 4:1
INSULATOR: LCP, COLOR: BLACK
TERMINAL: PHOS BRONZE

DESCRIPTION:
.050 x .050 EXTRA LENGTH SHROUDED TERMINAL STRIP

DWG. NO.
ESHF-1XX-01-X-D-XX-XX

BY: T NEWTON 1/10/2008 SHEET 1 OF 4

F:\DWG\MISC\MKTG\ESHF-1XX-01-X-D-XX-XX-MKT.SLDDRW

REVISION C

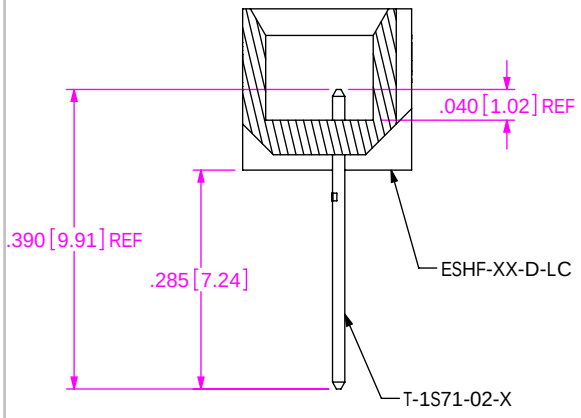

IN-PROCESS 1
(FOR -RA ONLY)

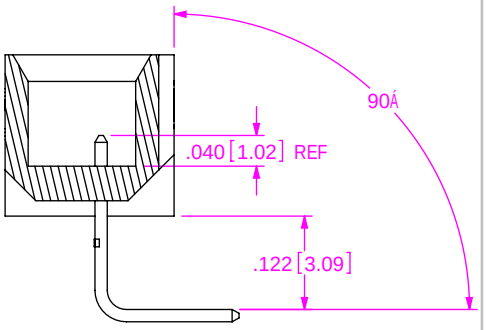

IN-PROCESS 2
(FOR -RA ONLY)

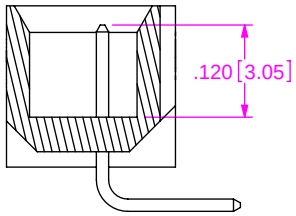

IN-PROCESS 3
(FOR -RA ONLY)

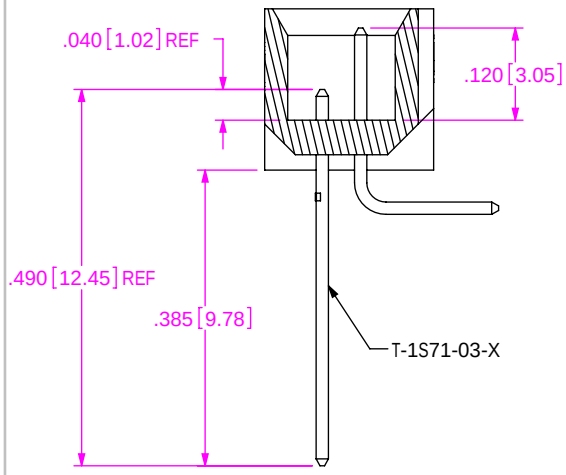

IN-PROCESS 4
(FOR -RA ONLY)

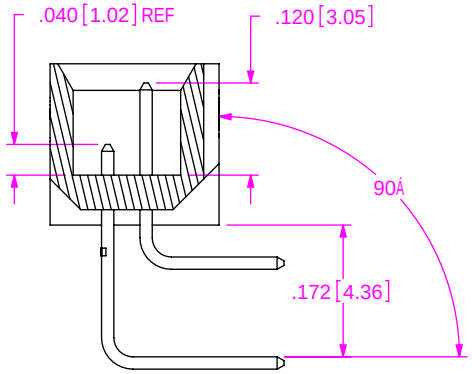

IN-PROCESS 5
(FOR -RA ONLY)

FIG. 2
(ESHF-110-01-X-D-RA SHOWN)
(SAME AS FIG. 1, DIFFERENT AS SHOWN)

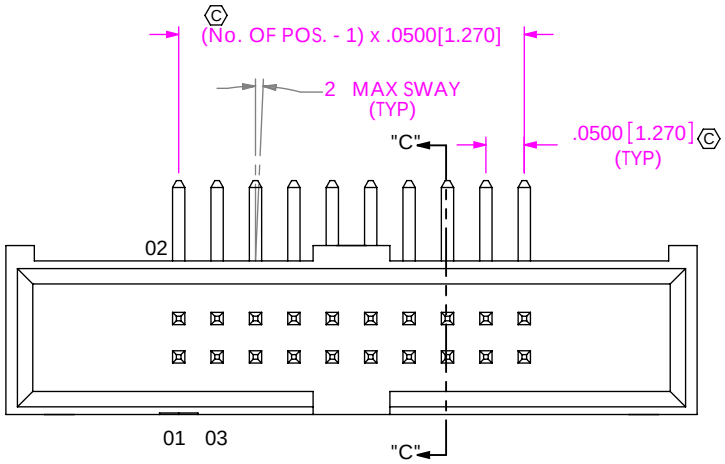

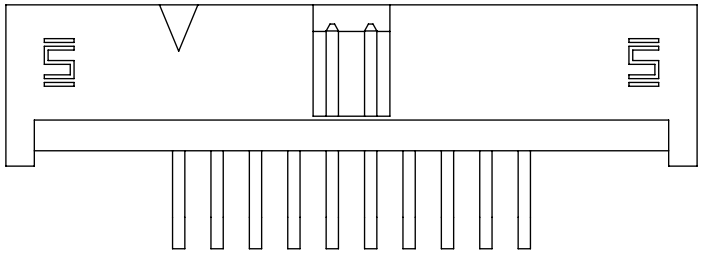

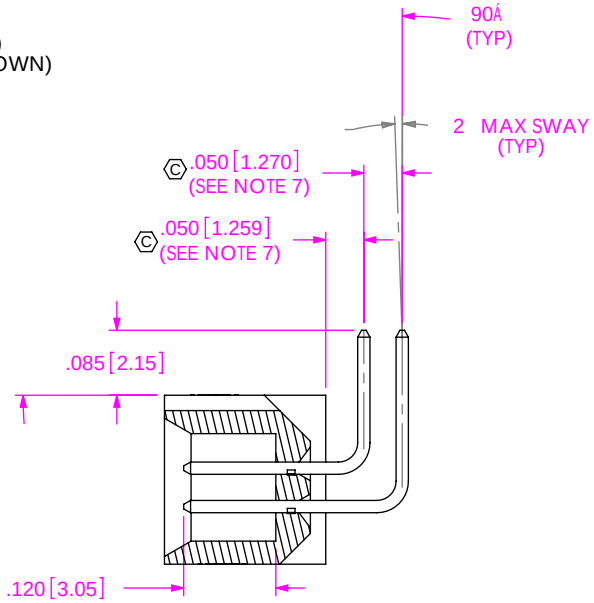

SECTION "C"-"C"

PROPRIETARY NOTE

THIS DOCUMENT CONTAINS INFORMATION CONFIDENTIAL AND PROPRIETARY TO SAMTEC, INC. AND SHALL NOT BE REPRODUCED OR TRANSFERRED TO OTHER DOCUMENTS OR DISCLOSED TO OTHERS OR USED FOR ANY PURPOSE OTHER THAN THAT WHICH IT WAS OBTAINED WITHOUT THE EXPRESSED WRITTEN CONSENT OF SAMTEC, INC.

DO NOT SCALE DRAWING

SHEET SCALE: 4:1

samtec
520 PARK EAST BLVD, NEW ALBANY, IN 47150
PHONE: 812-944-6733 FAX: 812-948-5047
e-Mail: info@SAMTEC.com code: 55322

DESCRIPTION:
.050 x .050 EXTRA LENGTH SHROUDED TERMINAL STRIP

DWG. NO.
ESHF-1XX-01-X-D-XX-XX

BY: T NEWTON 1/10/2008

F:\DWG\MISC\MKTG\ESHF-1XX-01-X-D-XX-XX-MKT.SLDDRW

REVISION C

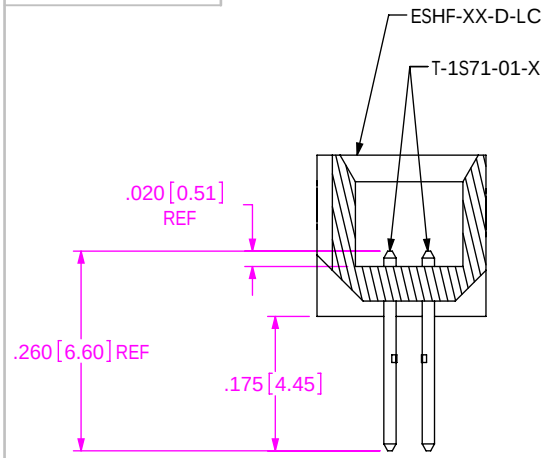

IN-PROCESS 1
(FOR -SM ONLY)

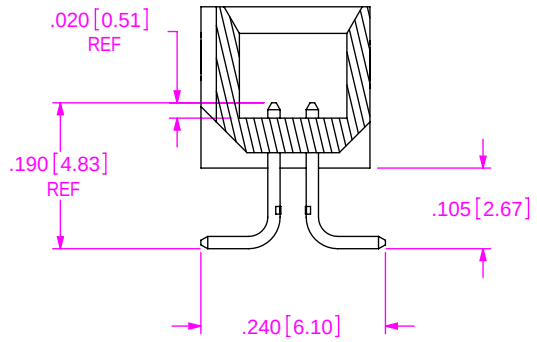

IN-PROCESS 2
(FOR -SM ONLY)

FIG. 3
(ESHF-110-01-X-D-SM-LC SHOWN)
(SAME AS FIG. 1, DIFFERENT AS SHOWN)

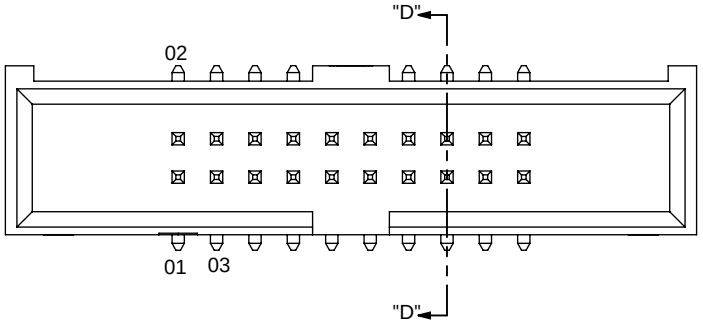

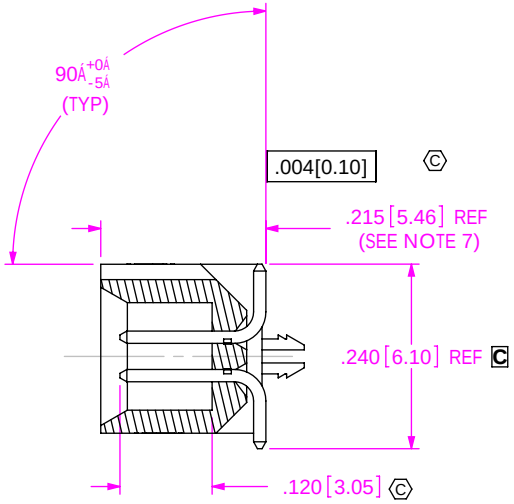

SECTION "D"-"D"

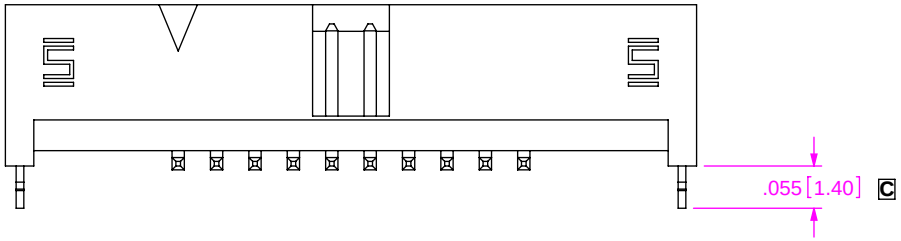

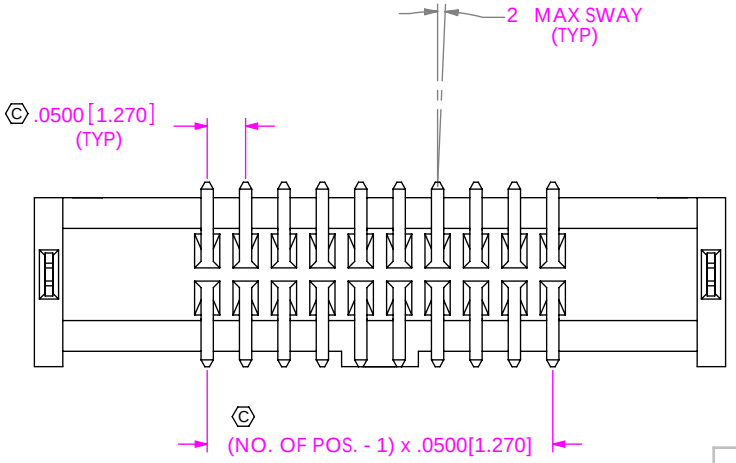

PROPRIETARY NOTE

THIS DOCUMENT CONTAINS INFORMATION CONFIDENTIAL AND PROPRIETARY TO SAMTEC, INC. AND SHALL NOT BE REPRODUCED OR TRANSFERRED TO OTHER DOCUMENTS OR DISCLOSED TO OTHERS OR USED FOR ANY PURPOSE OTHER THAN THAT WHICH IT WAS OBTAINED WITHOUT THE EXPRESSED WRITTEN CONSENT OF SAMTEC, INC.

DO NOT SCALE DRAWING

SHEET SCALE: 4:1

samtec
520 PARK EAST BLVD, NEW ALBANY, IN 47150
PHONE: 812-944-6733 FAX: 812-948-5047
e-Mail: info@SAMTEC.com code: 55322

DESCRIPTION:
.050 x .050 EXTRA LENGTH SHROUDED TERMINAL STRIP

DWG. NO.
ESHF-1XX-01-X-D-XX-XX

BY: T NEWTON 1/10/2008

F:\DWG\MISC\MKTG\ESHF-1XX-01-X-D-XX-XX-MKT.SLDDRW

REVISION C

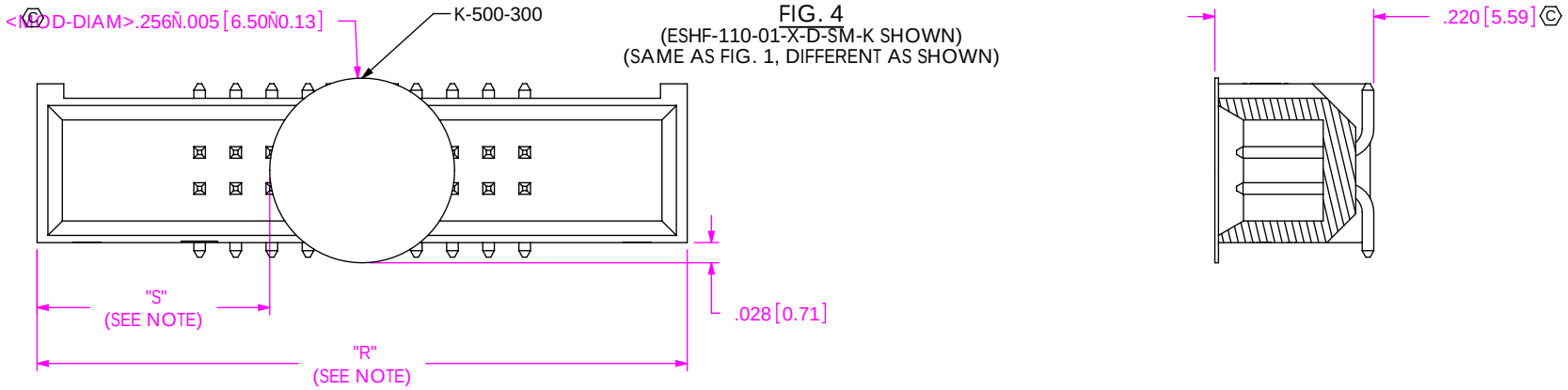

FIG. 4
(ESHF-110-01-X-D-SM-K SHOWN)
(SAME AS FIG. 1, DIFFERENT AS SHOWN)

NOTE: "R" = USED MEASURED DIMENSION (REF)
"S" = {("R" -.256[6.50])/2} 0.020[0.51]

PACKAGING

ALL PARTS ARE LOADED WITH POSITION 1
TOWARDS THE ARROW EXCEPT WHERE NOTED

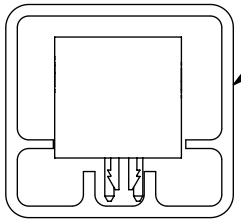

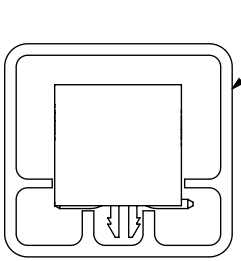

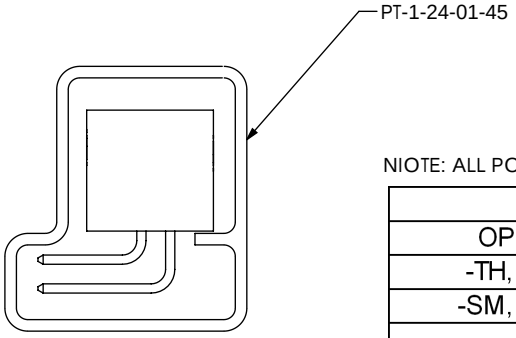

NIOTE: ALL POSITIONS ARE TO BE TUBED

TABLE 1		
OPTIONS	PACKAGING TUBE	PLUG
-TH, -TH-LC	PT-1-24-05-38	TP-03
-SM, -SM-LC	PT-1-24-05-38	TP-03
-RA	PT-1-24-01-45	TP-07

F:\DWG\MISC\MKTG\ESHF-1XX-01-X-D-XX-XX-MKT.SLDDRW

PROPRIETARY NOTE
THIS DOCUMENT CONTAINS INFORMATION CONFIDENTIAL AND PROPRIETARY TO SAMTEC, INC. AND SHALL NOT BE REPRODUCED OR TRANSFERRED TO OTHER DOCUMENTS OR DISCLOSED TO OTHERS OR USED FOR ANY PURPOSE OTHER THAN THAT WHICH IT WAS OBTAINED WITHOUT THE EXPRESSED WRITTEN CONSENT OF SAMTEC, INC.

DO NOT SCALE DRAWING

SHEET SCALE: 4:1

520 PARK EAST BLVD, NEW ALBANY, IN 47150
PHONE: 812-944-6733 FAX: 812-948-5047
e-Mail: info@SAMTEC.com code: 55322

DESCRIPTION:
.050 x .050 EXTRA LENGTH SHROUDED TERMINAL STRIP

DWG. NO.
ESHF-1XX-01-X-D-XX-XX

BY: T NEWTON 1/10/2008