REV	DESCRIPTION	BY DATE	APPD
B	REVISED PER ECR# 7849	C.W.B. 10/24/03	LMD

NOTES:

1. THIS CONNECTOR IS DESIGNED TO MEET THE APPLICABLE PERFORMENCE REQUIREMENTS OF IEC 61076-4-101 AND BELLCORE GR-1217-CORE.
2. CONNECTORS ARE END STACKABLE ON A .07874/2.0 GRID.
3. FOR COMPLIANT CONTACT PLATED THRU HOLE REQUIREMENTS SEE THRU HOLE PLATING VIEW. MINIMUM P.C. BOARD THICKNESS .062/1.57 NOMINAL.
4. DIMENSIONS APPLY AFTER INSTALLATION IN P.C. BOARD.
5. .0078/0.2 MAX. GAP PERMISSIBLE TO PC BOARD.
6. TELCORDIA (BELLCORE) CERTIFIED LUBRICANT PER GR-1217-CORE.
7. CONNECTOR HAS A MYLAR STRIP ON THE TAILS FOR EASE OF INSTALLATION.

NX SERIES – MetCon-2® BACKPANEL PIN CONNECTORS

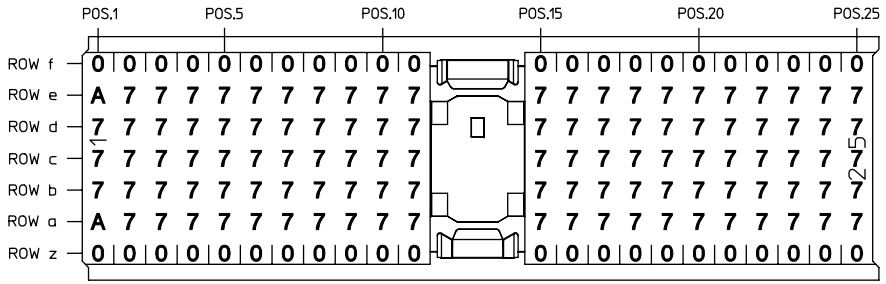

SELECTIVE LOADING PATTERN

SELECTIVE LOADING CHART				
PIN CODE	MATING LENGTH OF CONTACTS			CONTACT TAIL LENGTHS
	SIGNAL	ALL	GROUND	
	(M)	P	(N)	L
0	NO CONTACTS LOADED			
7	.209/5.30	.323/8.20	N/A	.512/13.00
A	.268/6.80	.382/9.70	N/A	.512/13.00

SPECIFICATIONS

MATERIALS

(1) Insulators — Thermoplastic Polyester, glass filled Rated UL 94V-0. Color: Gray

(2) Pin contacts — Copper Alloy
Finish: Mating Zone = Gold over Nickel
Compliant Zone = Tin/Lead
Performance Class 2 = 250 cycles

PERFORMANCE CHARACTERISTICS [1]

Insulation resistance	5,000 megohms minimum
Dielectric withstanding voltage (at sea level)	750 Vrms
Current rating	1 amp @ 70°C, fully loaded 1.5 amp @ 20°C, fully loaded
Operating temperature range	-55°C to +125°C
Contact resistance	20 milliohms maximum
cUL Approved	File E31650

Compliant Contact

Max. Insertion Force (per contact)	22.5 lbs. / 100 N
Min. Retention Force (per contact)	4.5 lbs. / 20 N

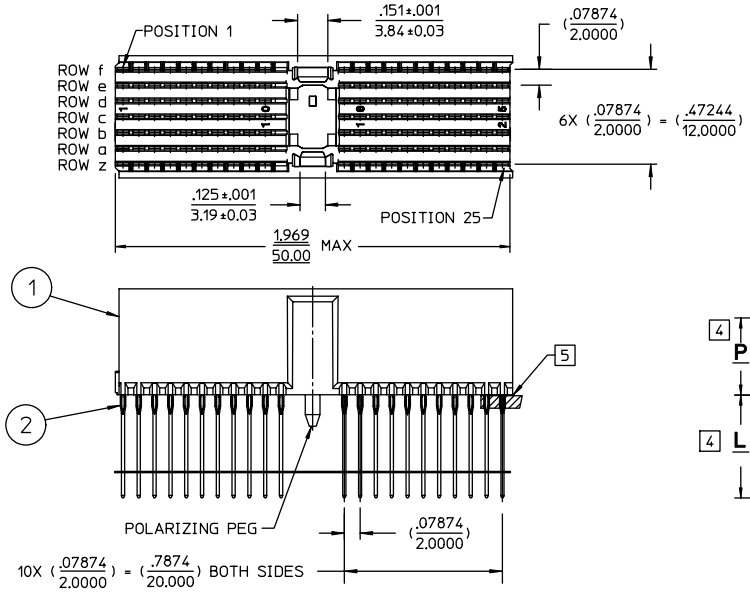

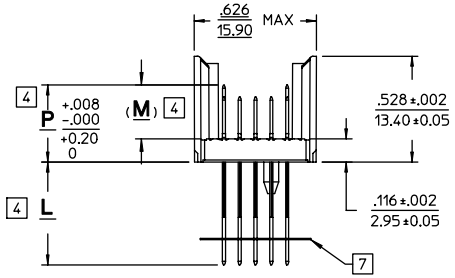

CATALOG No. NX5A0BD49X00CA SHOWN

CUSTOMER TOOLING REQUIRED			
DESCRIPTION	SEATING TOOL CATALOG No.	INSTRUCTION SHEET	DRAWING NUMBER
BACKPANEL MODULE TYPE A	107-43896-01	43500	43896
INSERTION UNIT HOLDER 5 + 2 ROW MODULES	107-43901-01	43500	43901
INSERTION TOOL FOR INDIVIDUAL SHIELDING CONTACTS	107-43900-01	43505	43900
INSERTION TOOL FOR INDIVIDUAL SIGNAL CONTACTS	107-43899-01	43504	43899
EXTRACTION TOOL FOR INDIVIDUAL CONTACTS	107-43898-01	43503	43898

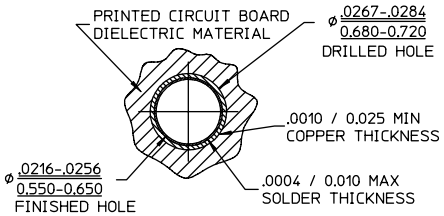

THRU HOLE PLATING
SCALE 10:1

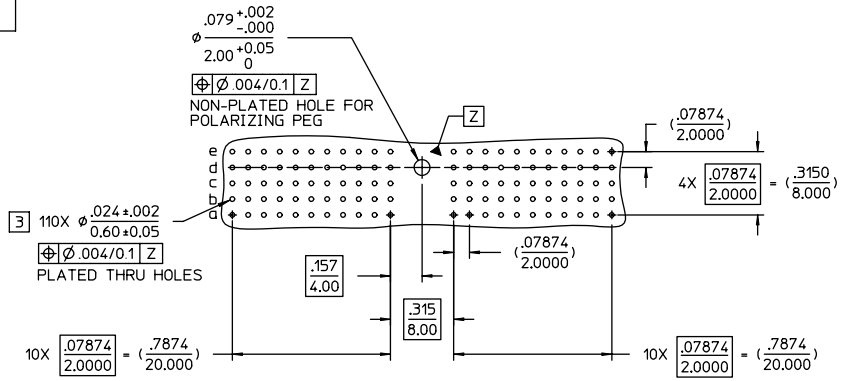

RECOMMENDED PC BOARD REQUIREMENTS
(COMPONENT SIDE OF BOARD SHOWN)

CATALOG No.	DESCRIPTION
NX5A0BD49X00CAL	LUBRICATED [6]
NX5A0BD49X00CA	STANDARD

PER ASME Y14.5M-1994
UNLESS OTHERWISE SPECIFIED:
DIMENSIONS ARE IN INCHES OR INCHES/MM
TOLERANCES: MM
DECIMALS .XX ± .02/0.5
.XXX ± .004/0.10
ANGLES ±-- SCALE: 1:1

CUSTOMER DRAWING

Litton
Winchester Retconn
400 Park Road
Watertown, Connecticut
06795

TITLE
MetCon-2® NX5 SERIES
BACKPANEL CONNECTOR
MODULE STYLE A

DRAWN	DATE	APPROVED	DATE
D.J.P.	02/04/02	J.Bonessi	02/05/02
APPROVED	DATE	APPROVED	DATE
V.B.HARRIS	2/5/02	C.W.B.	02/06/02

A | 29839 | SHT. 1 OF 1 | REV. B