DWG. NO.	312-010-6149G

REV	DESCRIPTION	BY DATE	APPD
A	ECR 7438	JWH 8/19/02	

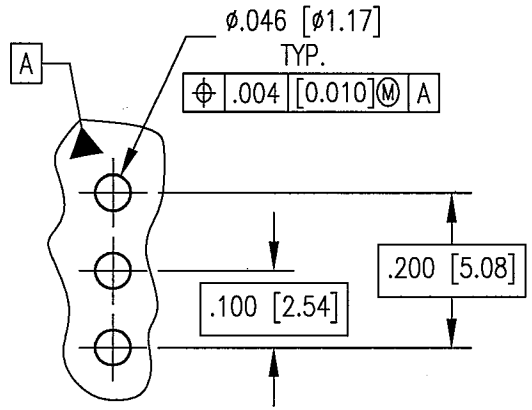

RECOMMENDED MOUNTING HOLES

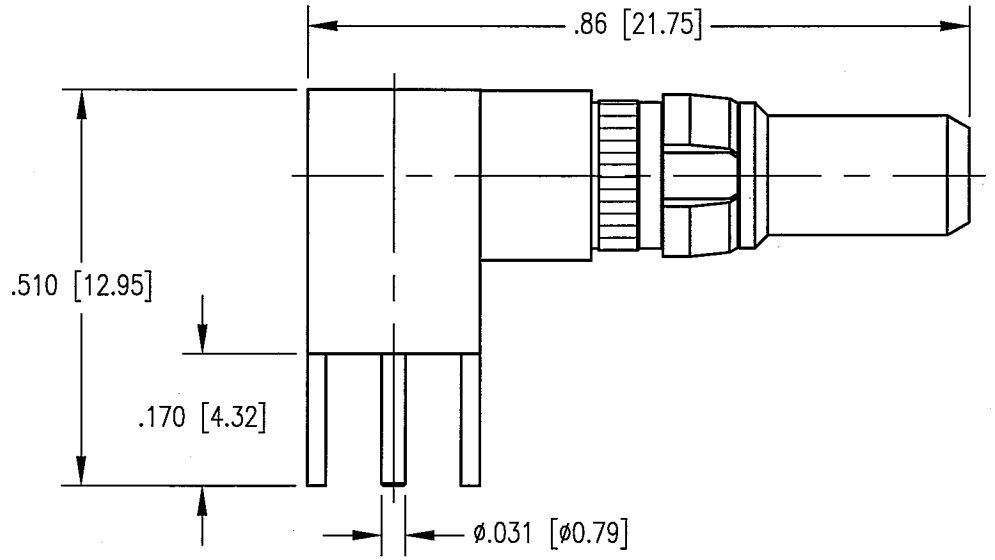

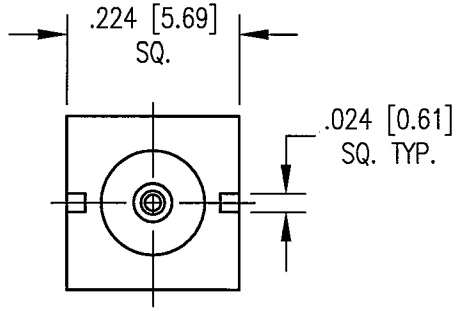

NOTES:

1. MATERIALS:
   - BODY: BRASS PER ASTM B16
   - CONTACT: COPPER ALLOY
   - INSULATOR: TEFLON PER ASTM D1710
   - CLIP RING: BERYLLIUM COPPER PER ASTM B194
2. FINISH:
   - BODY AND CONTACT: .000030 MIN. GOLD PER MIL-G-45204 OVER .000050 MIN. NICKEL PER QQ-N-290
   - CLIP RING: .000100 MIN. NICKEL PER QQ-N-290 OVER COPPER FLASH

PER ASME Y14.5M-1994
UNLESS OTHERWISE SPECIFIED:
DIMENSIONS ARE IN INCHES [MM]
TOLERANCES:
DECIMALS .XX ± .01 [0.254]
.XXX ± .005 [0.127]
ANGLES ± 2° SCALE: 6:1

CUSTOMER DRAWING

DRAWN	DATE	CHECKED	DATE
KJT	5/3/01	JWH	5/3/01
APPROVED	DATE	APPROVED	DATE
JEM	5/3/01	JED	5/3/01

NORTHROP GRUMMAN

Winchester Electronics 400 Park Road Watertown, CT 06795

TITLE: 31 SERIES RIGHT ANGLE PLUG

A	312-010-6149G	SHT. 1 OF 1	REV. A

June 2006 - This drawing became the property of Winchester Electronics Corporation, Wallingford, CT.