HDB 15 Male
Plastic: Blue

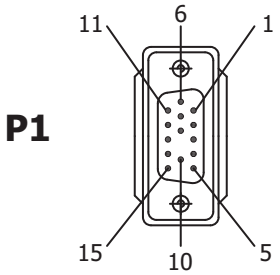

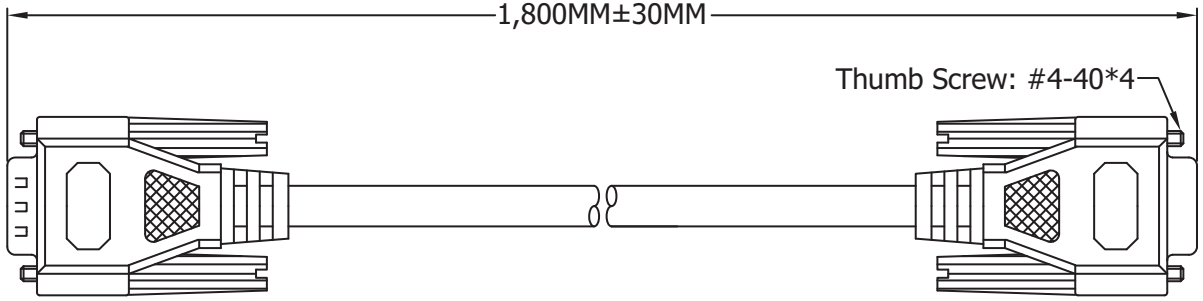

HDB 15 Female
Plastic: Blue

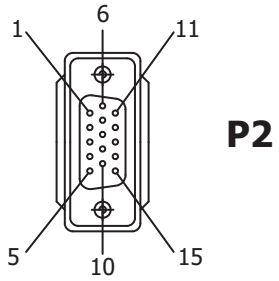

PIN OUT

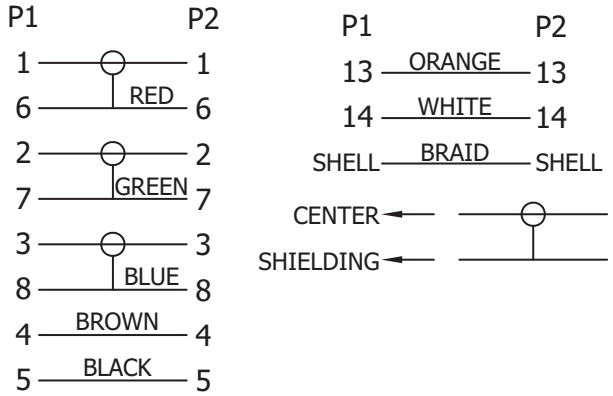

Material:

1.CABLE:28AWG(7/0.127 T.C)*3COAX(75 OHMS)+INSULATION:FO-PE INNER JACKET:PVC OD:Ø2.5± 0.1mm(UL-1354)+28AWG(7/0.127 T.C)*4C+ INSULATION:SR-PVC ID:Ø0.85± 0.05mm(UL-1061)+AL/MY+DRAIN WIRE:26AWG(7/0.16 T.C)+BRAID SHIELD(85%)+OUTER JACKET:PVC COLOR:BEIGE, OD:Ø 8.1± 0.15mm UL-2919

2.CONNECTOR:
P1:HDB 15P MALE,GOLD FLASH CONTACT,NICKEL PLATED SHELL (9TH PIN UNLOAD)
P2:HDB 15P FEMALE,GOLD FLASH CONTACT,NICKEL PLATED SHELL

3.SHIELD:COPPER-FOIL 360° SOLDERED TO CONNECTOR SHELL & CABLE BRA

4.HOOD:MOLDED TYPE,PVC 45P,COLOR:BEIGE.

5.ELECTRONIC TEST:
<1>.100% OPEN SHORT & MIS WIRE TEST
<2>.CONTACT RESISTANCE 3 OHMS MAX
<3>.INSULATION RESISTANCE 20 M OHMS MIN

6.PACKING:SEE P-0039 REV.C PACKING DRAWING
(HANKING SIZE MUST BE SMALLER THAN PACKING)
PACKING TYPE: DB VP4.

RoHS Complaint

Scale	1:1						Name
TOLERANCE							
X.X	±0.40				Drawn	11.15.11	Chappell
X.XX	±0.25				Approved		
X.XXX	±0.15						
Angle	±3°						
			Modification	Date	Name		

ASSMANN WSW components

Item No.
AK3220-1.8-R

Title
Premium VGA Monitor extension cable - HD D-Sub 15-pin Male <=> Female, 1.8 Meters

Drawing No.

rev00

Replace

Sheet