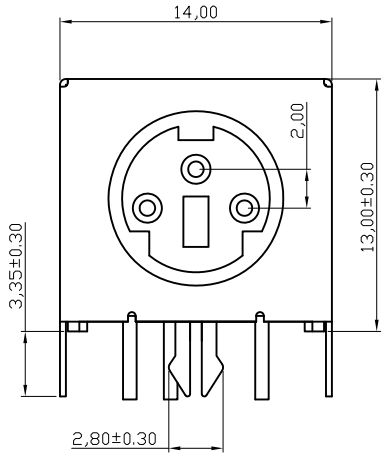

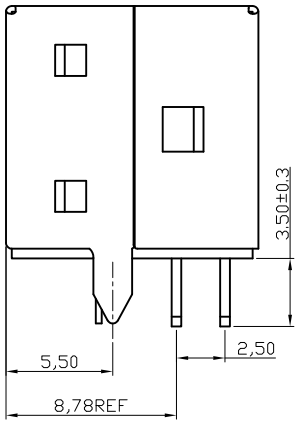

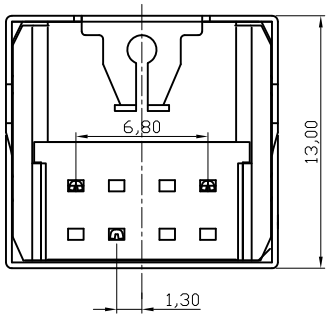

1.Material:
Contacts :Brass
Insulator :PBT+30% G.F. UL 94V-0;Black
Shell :Brass
2.Mechanical:
Mating Force: 45N max.
Withdrawal Force: 7N min.
Durability: 500 cycles min.
3.Electrical:
Current-max[amps] 1.0A
Voltage-max[volts] 30V
Withstanding Voltage 750V AC
Contact Resistance [ohms] 30 milliohms max
Insulation Resistance [ohms] 1000 Megohms min
4.Plating:
Contacts:Gold Flash Selective over Nickel
Shell: Nickel
5.Environmental
Temperature Range -55°C~+85°C

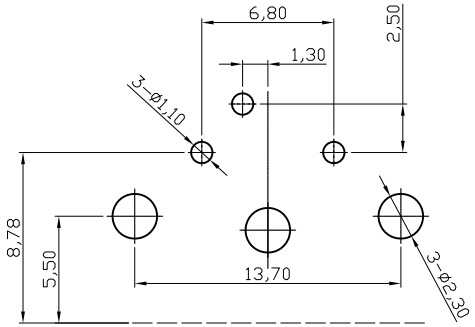

RECOMMENDED P.C.B. PATTERN LAYOUT
TOP VIEW (TOLERANCE: ±0,05)

RoHS compliant

Scale	1:1
TOLERANCE	
X.X	±0.38
X.XX	±0.25
X.XXX	±0.15
DIM	TOL
X.°	±1°
X.X°	±X°
Angle	TOL

Id.	Modification	Date	Name
③	Change the manufacture plant	25.11.2010	Alex
②	Update	15.07.2009	Rale
①	Drawn	19.03.2004	Hellwig

	Date	Name
Drawn	19.03.2004	Hellwig
Approved	25.11.2010	Gerber

ASSMANN WSW components

Customer-No.

ASSMANN WSW-No.
A-DIO-FS03

Drawing-No.
ASS 1622 CO

rev03

Replace

Sheet