APPROVED: _____

DATE: _____ TITLE: _____

Rev	AWO #	Description	Date	Appr
-		RELEASED	5/10/05	
A		REDRAWN	3/17/11	

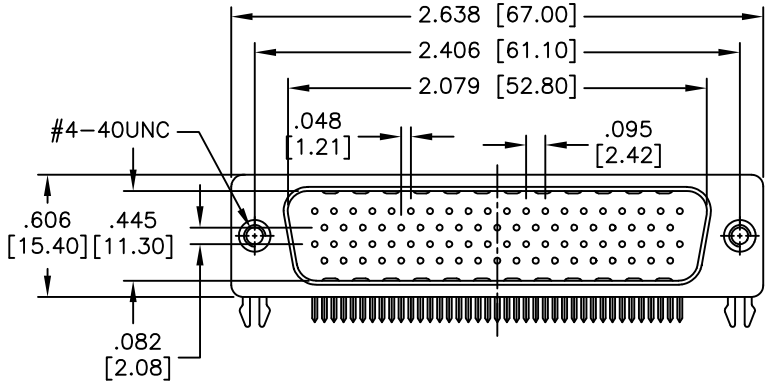

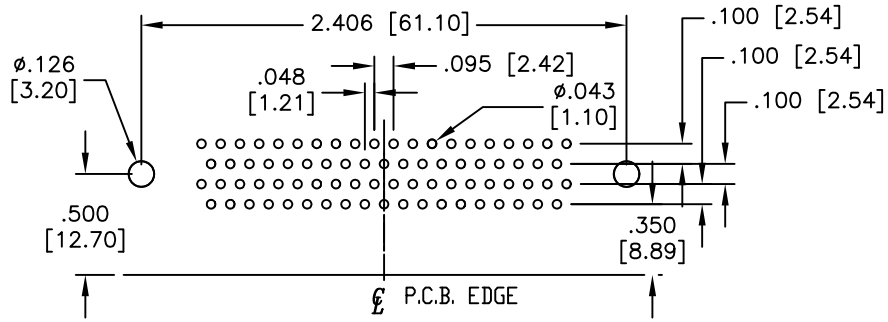

RECOMMENDED PCB LAYOUT

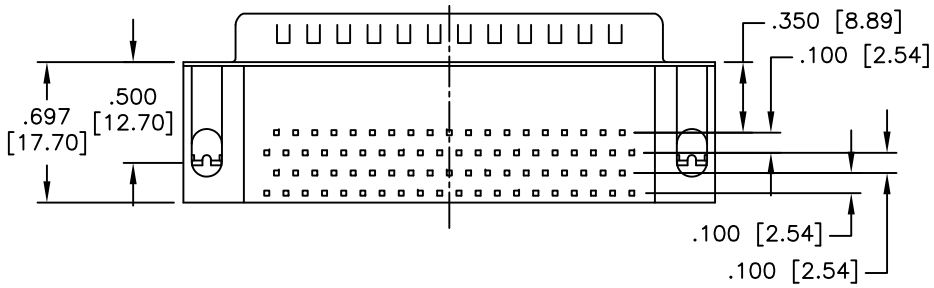

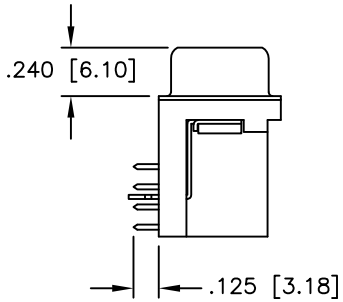

SPECIFICATIONS:

Material:

Insulator: PBT, glass reinforced, rated UL 94V-0
Insulator color: Black
Contacts: Copper Alloy
Shell: SPCC, Nickel plated
Boardlock: Copper Alloy, Tin plated
Rivet: Copper Alloy, Nickel plated

Plating:

Gold flash over Nickel underplate on contact area,
Tin over Copper underplate on solder area.

Electrical:

Operating voltage: 250 VAC max
Current rating: 3 Amps per contact
Contact resistance: 25 mohms max
Insulation resistance: 5,000 Mohms min
Dielectric withstanding voltage: 1,000 VAC for 1 minute

Temperature Rating:

Operating temperature: -55°C to +85°C

Environmental:

Lead free, RoHS compliant
Recommended soldering temp: 235°C for 5 seconds

RoHS COMPLIANT

UNLESS OTHERWISE SPECIFIED
ALL DIMENSIONS ARE INCHES [MM]
TOLERANCES: EXCEPT AS NOTED

INCHES		HOLES	
.X	± .10	Ø.X	±.10
.XX	± .020	Ø.XX	±.015
.XXX	± .015	Ø.XXX	±.010

APPROVALS		DATE
DRAWN	SS	5/10/05
CHECKED		
APPROVED		

ADAM TECH
909 Rahway Avenue, Union, NJ 07083
Phone: 908-687-5000 Fax: 908-687-5710

TITLE: HIGH DENSITY D-SUB PLUG, 78P, R/A
#4-40 INSERTS & FORKED BOARDLOCKS

SIZE	PART NO.	REV.
X	HDL78-PL-B	A

REF: S00027T | SCALE: NTS | SHEET 1 OF 1