40 CHARACTERS X 4 LINES
CHARACTER SIZE: 3.45W X 5.22H mm (5 X 7 DOTS)
3.45W X 5.98H mm (5 X 8 DOTS)

MDL(S)-40466A

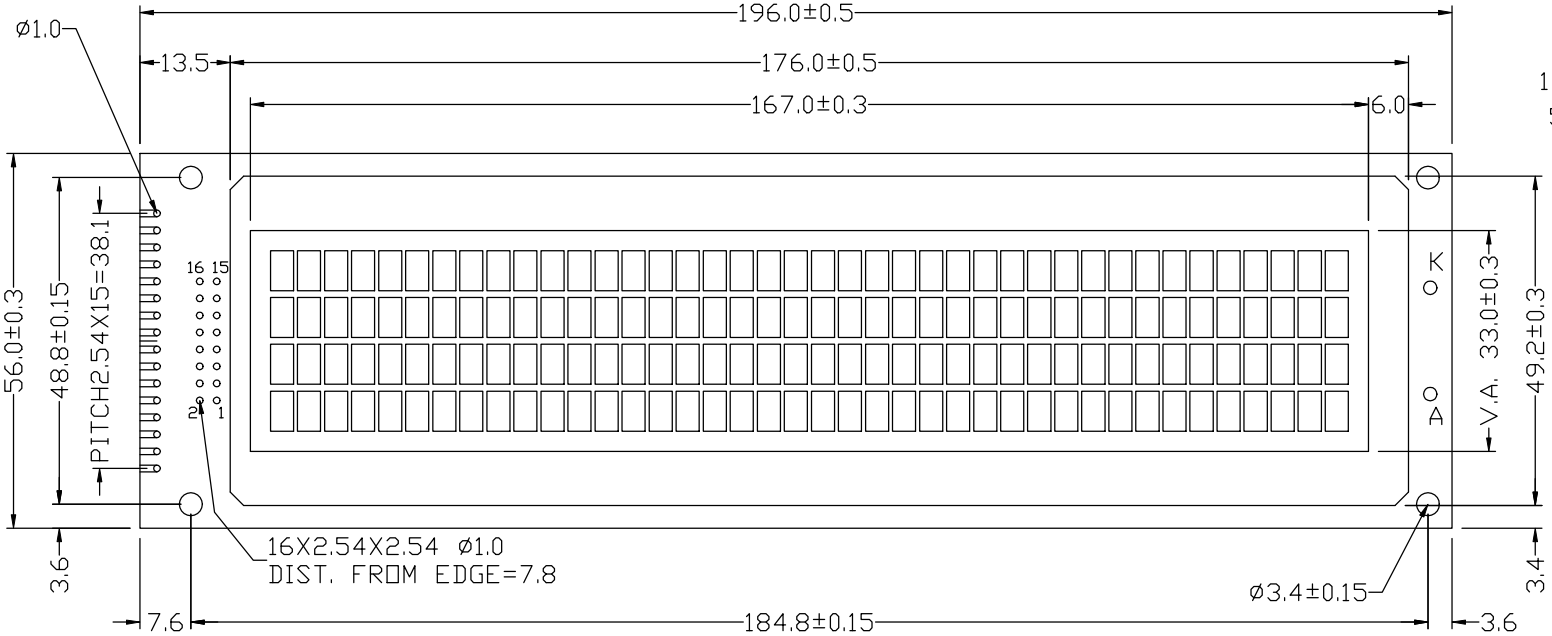

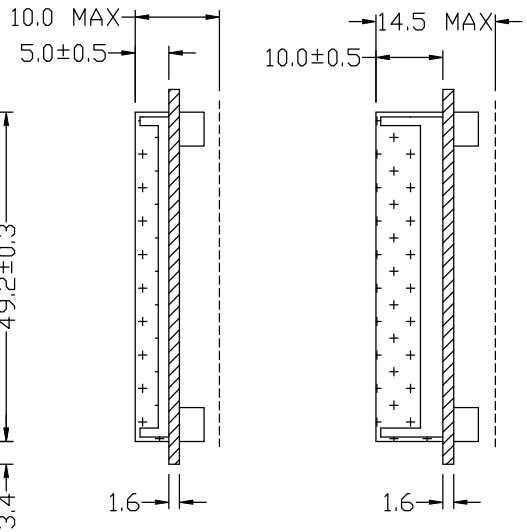

WITH LED04

16 PIN CONNECTION	1	2	3	4	5	6	7	8	9	10	11	12	13	14	15	16
	VSS	VDD	VO	RS	R/W	NC	DB0	DB1	DB2	DB3	DB4	DB5	DB6	DB7	DB8	DB9

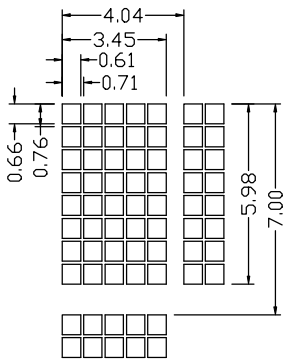

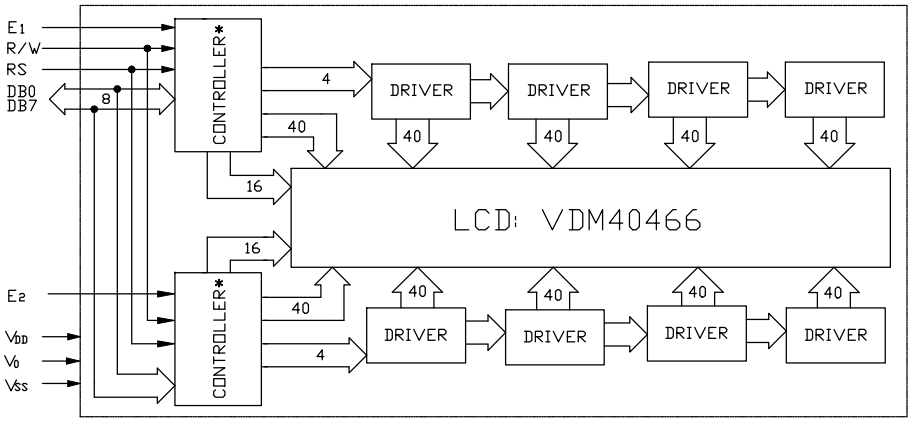

* HD44780 OR EQUIVALENT

Free Datasheet http://www.datasheet4u.com/