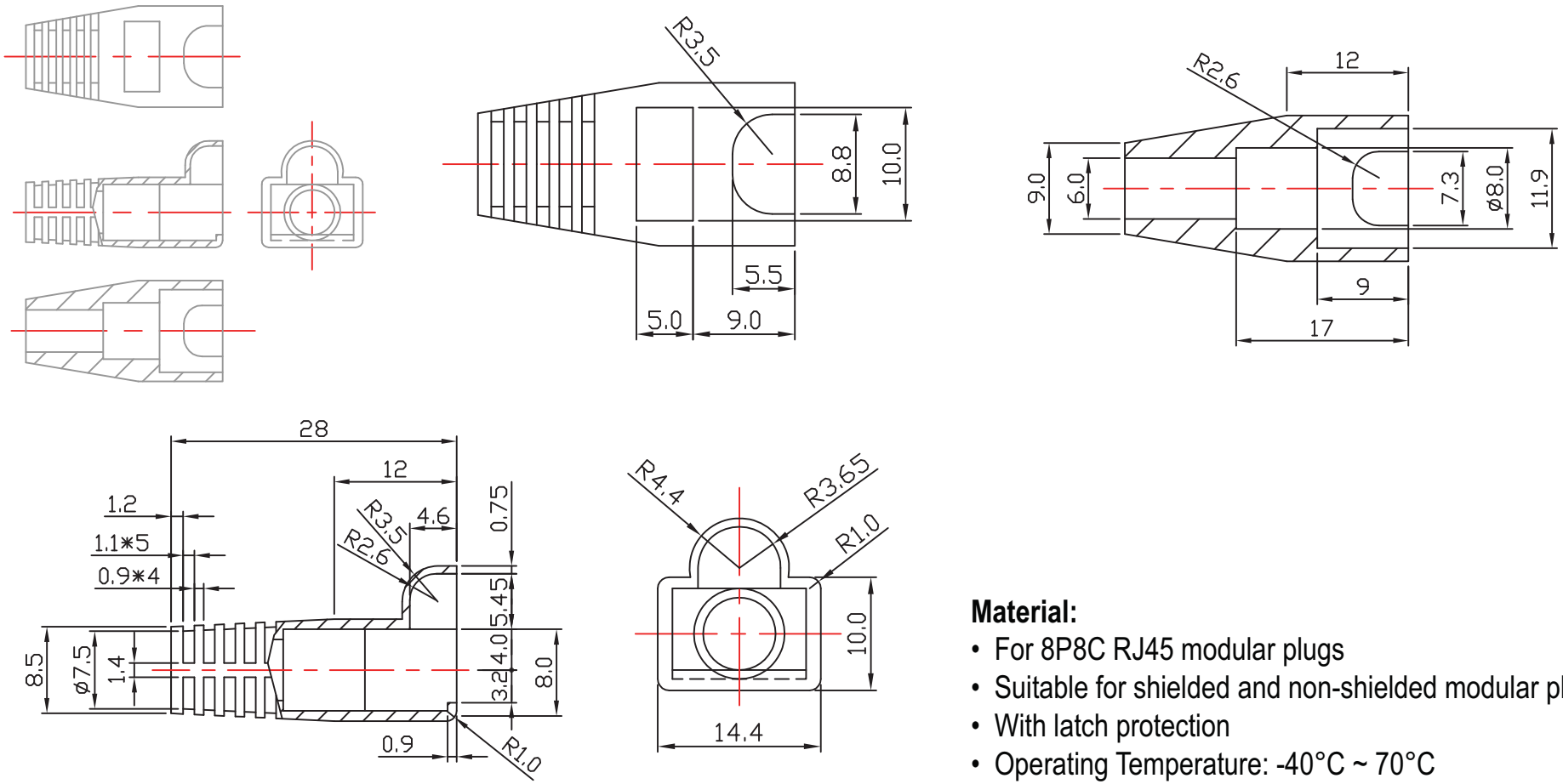

Material:

- For 8P8C RJ45 modular plugs
- Suitable for shielded and non-shielded modular plugs
- With latch protection
- Operating Temperature: -40°C ~ 70°C

***Not for Hirose type**

Unit: MM

RoHS Complaint

Scale	1:1							Name
TOLERANCE						Drawn	11.21.11	Chappell
X.X	±0.40					Approved		
X.XX	±0.25							
X.XXX	±0.15							
Angle	±3°							
			Modification	Date	Name			

ASSMANN WSW components

Item No.

A-MOT/E-8/8-R

Title: Kink protection boot - RJ45/8P8C modular plugs, Grey

Drawing No.

rev00

Replace

Sheet