SSF6072G5

60V N-Channel MOSFET

Main Product Characteristics

V_{DSS}	60V
R_{DS}(on)	67mΩ (typ.)
I_D	4A

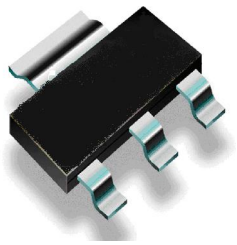

SOT-223

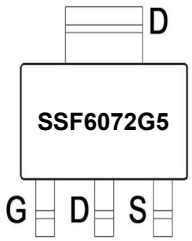

Marking and Pin Assignment

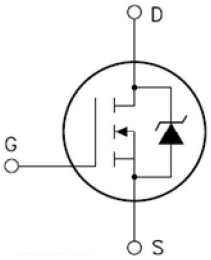

Schematic Diagram

Features and Benefits

- Advanced MOSFET process technology
- Special designed for DC-DC and DC-AC converters, load switching and general purpose applications
- Ultra low on-resistance with low gate charge
- Fast switching and reverse body recovery
- 175℃ operating temperature
- Lead free product

Description

It utilizes the latest processing techniques to achieve the high cell density and reduces the on-resistance with high repetitive avalanche rating. These features combine to make this design an extremely efficient and reliable device for use in DC-DC and DC-AC converters and a wide variety of other applications.

Absolute Max Rating

Symbol	Parameter	Max.	Units
I_D @ TC = 25°C	Continuous Drain Current, V_{GS} @ 10V①	4	A
I_D @ TC = 100°C	Continuous Drain Current, V_{GS} @ 10V①	3	
I_{DM}	Pulsed Drain Current②	16	
P_D @TC = 25°C	Power Dissipation③	3.3	W
V_{DS}	Drain-Source Voltage	60	V
V_{GS}	Gate-to-Source Voltage	± 20	V
E_{AS}	Single Pulse Avalanche Energy @ L=0.3mH	15	mJ
I_{AS}	Avalanche Current @ L=0.3mH	10	A
T_J T_{STG}	Operating Junction and Storage Temperature Range	-55 to +175	°C

Thermal Resistance

Symbol	Characteristics	Typ.	Max.	Units
$R_{\theta JA}$	Junction-to-ambient (t ≤ 10s) ④	—	38	℃/W
	Junction-to-Ambient (PCB mounted, steady-state) ④	—	35	℃/W

Electrical Characteristics @T_A=25℃ unless otherwise specified

Symbol	Parameter	Min.	Typ.	Max.	Units	Conditions
$V_{(BR)DSS}$	Drain-to-Source breakdown voltage	60	—	—	V	V_{GS} = 0V, ID = 250μA
$R_{DS(on)}$	Static Drain-to-Source on-resistance	—	67	100	mΩ	V_{GS}=10V,I_D = 1.5A
		—	76	115		V_{GS}=5V,I_D = 1.5A
$V_{GS(th)}$	Gate threshold voltage	1	—	2.5	V	V_{DS} = V_{GS}, I_D = 250μA
I_{DSS}	Drain-to-Source leakage current	—	—	1	μA	V_{DS} = 60V,V_{GS} = 0V
		—	—	10		T_J = 125°C
I_{GSS}	Gate-to-Source forward leakage	—	—	100	nA	V_{GS} =20V
		—	—	-100		V_{GS} = -20V
gfs	Forward Transconductance	1	—	—	S	V_{DS} = 15 V I_D = 1.5A
Q_g	Total gate charge	—	12	—	nC	I_D = 4A,
Q_{gs}	Gate-to-Source charge	—	3.5	—		V_{DS}=40V,
Q_{gd}	Gate-to-Drain("Miller") charge	—	3.7	—		V_{GS} =10V
$t_{d(on)}$	Turn-on delay time	—	9.2	—	ns	V_{GS}=10V, VDS=25V,
t_r	Rise time	—	16.7	—		R_{GEN}=50Ω，I_D = 1.2A,
$t_{d(off)}$	Turn-Off delay time	—	35.4	—		
t_f	Fall time	—	8.6	—		
C_{iss}	Input capacitance	—	582	—	pF	V_{GS} = 0V
C_{oss}	Output capacitance	—	49	—		V_{DS} = 30V
C_{rss}	Reverse transfer capacitance	—	36	—		f = 1MHz

Source-Drain Ratings and Characteristics

Symbol	Parameter	Min.	Typ.	Max.	Units	Conditions
I_S	Continuous Source Current (Body Diode)	—	—	4	A	MOSFET symbol showing the integral reverse p-n junction diode. 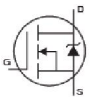
I_{SM}	Pulsed Source Current (Body Diode)	—	—	16	A	
V_{SD}	Diode Forward Voltage	—	—	1.5	V	I_S=4A, V_{GS}=0V

Test Circuits and Waveforms

EAS test circuits:

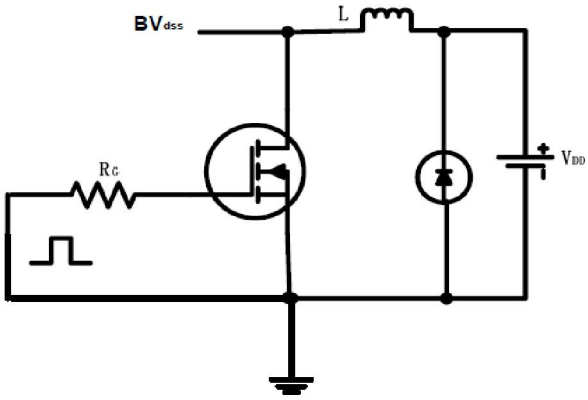

Gate charge test circuit:

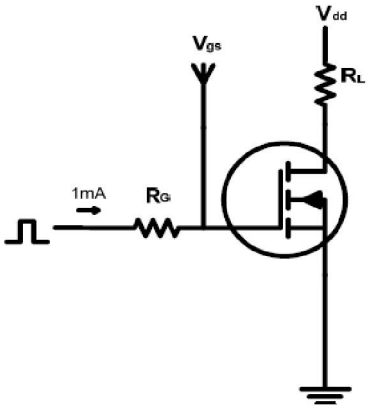

Switch Time Test Circuit:

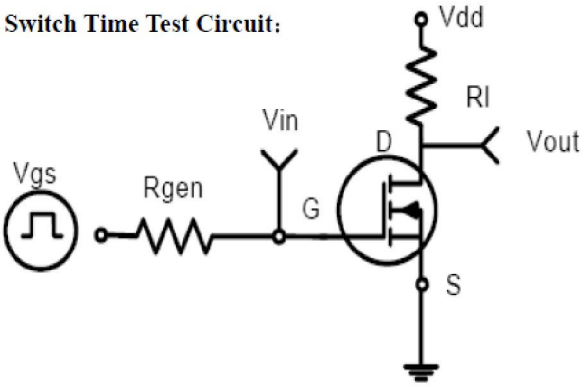

Switch Waveforms:

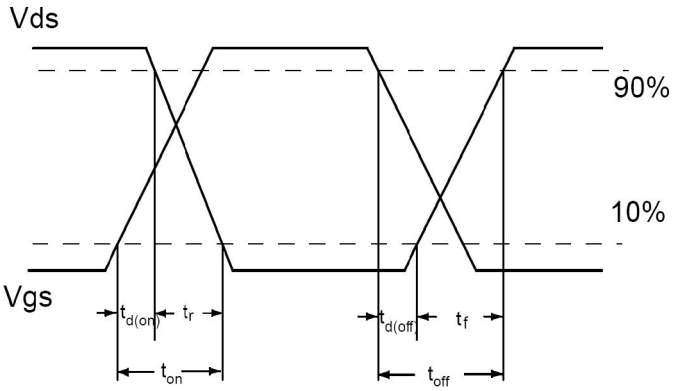

Notes:

①The maximum current rating is limited by bond-wires.

②Repetitive rating; pulse width limited by max. junction temperature.

③The power dissipation PD is based on max. junction temperature, using junction-to- ambient thermal resistance.

④The value of $R_{\theta JA}$ is measured with the device mounted on 1in 2 FR-4 board with 2oz. Copper, in a still air environment with TA =25°C

Typical Electrical and Thermal Characteristics

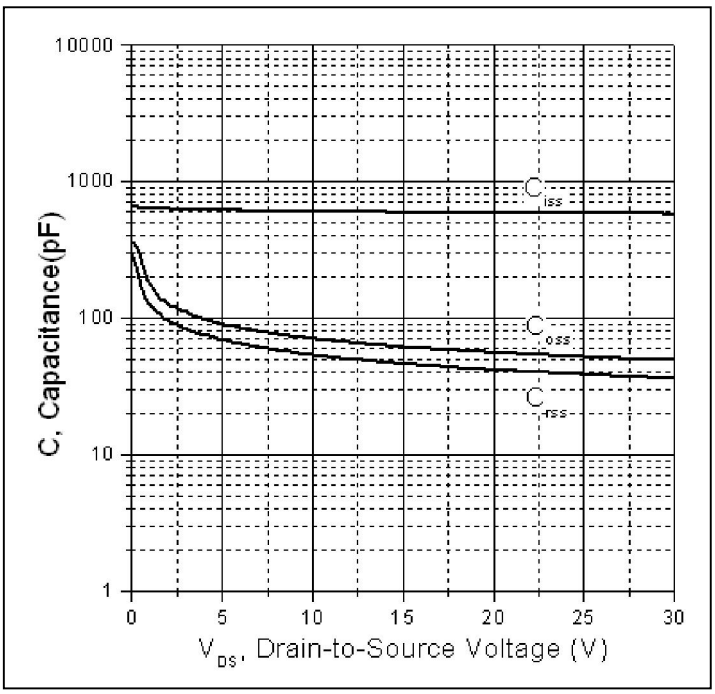

Figure 1: Typical Capacitance Vs. Drain-to-Source Voltage

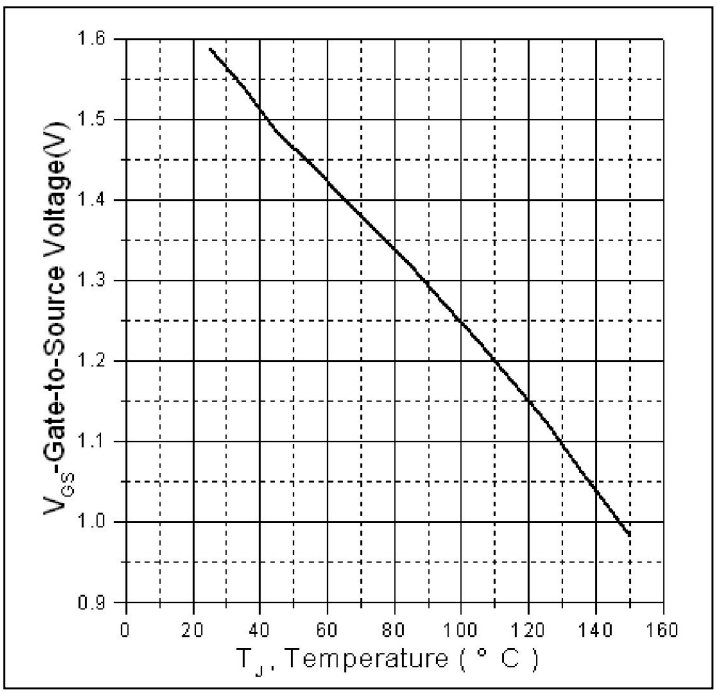

Figure 2. Gate to source cut-off voltage

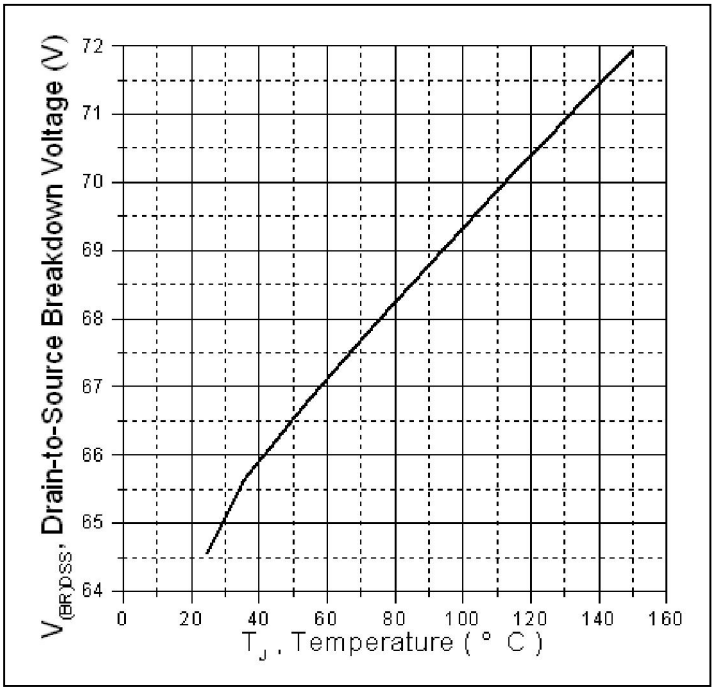

Figure 3. Drain-to-Source Breakdown Voltage Vs. Case Temperature

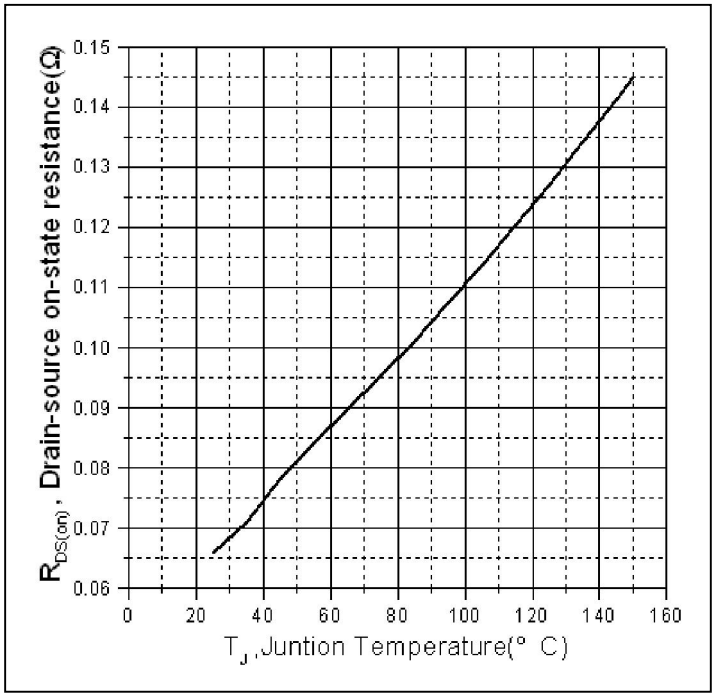

Figure 4: Normalized On-Resistance Vs. Case Temperature

Typical Electrical and Thermal Characteristics

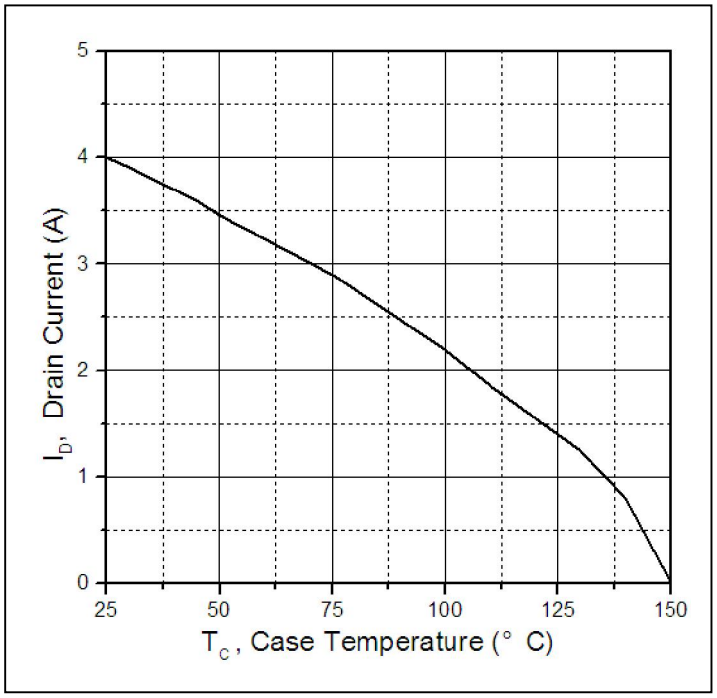

Figure 5. Maximum Drain Current Vs. Case Temperature

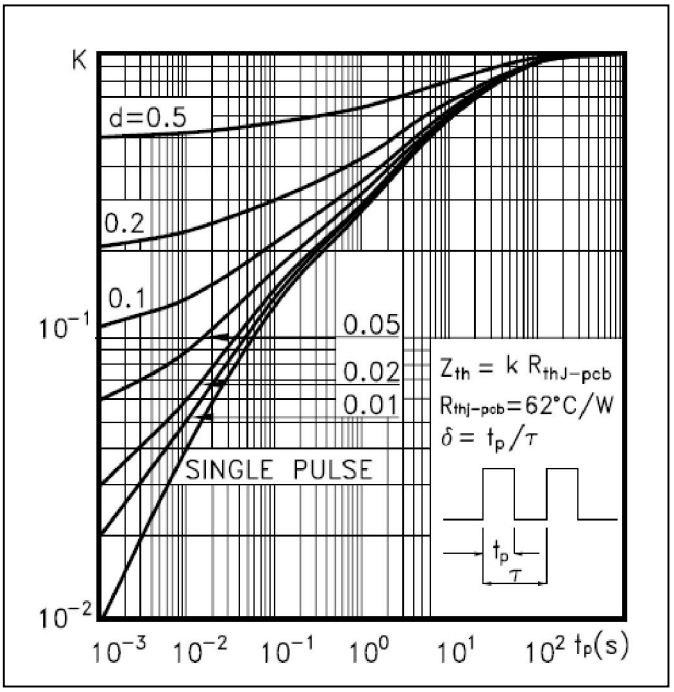

Figure 6. Maximum Effective Transient Thermal Impedance, Junction-to-Case

Mechanical Data

SOT-223 Dimensions in Millimeters (UNIT: mm)

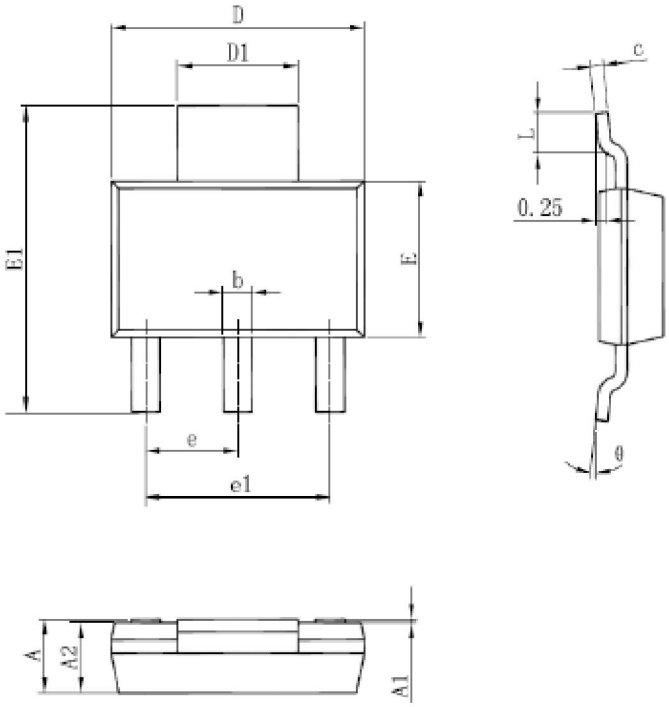

Symbol	Dimensions In Millimeters		Dimensions In Inches	
	Min	Max	Min	Max
A	1.520	1.800	0.060	0.071
A1	0.000	0.100	0.000	0.004
A2	1.500	1.700	0.059	0.067
b	0.660	0.820	0.026	0.032
c	0.250	0.350	0.010	0.014
D	6.200	6.400	0.244	0.252
D1	2.900	3.100	0.114	0.122
E	3.300	3.700	0.130	0.146
E1	6.830	7.070	0.269	0.278
e	2.300(BSC)		0.091(BSC)	
e1	4.500	4.700	0.177	0.185
L	0.900	1.150	0.035	0.045
θ	0°	10°	0°	10°

Notes：

① Dimensions are inclusive of plating

② Package body sizes exclude mold flash and gate burrs. Mold flash at the non-lead sides should be less than 6 mils.

③ Dimension L is measured in gauge plane.

④ Controlling dimension is millimeter, converted inch dimensions are not necessarily exact.

Ordering and Marking Information

Device Marking: SSF6072G5

Package (Available)
SOT-223
Operating Temperature Range
C : -55 to 175ºC

Devices per Unit

Package Type	Units/ Tube	Tubes/ Inner Box	Units/ Inner Box	Inner Boxes/ Carton Box	Units/ Carton Box
SOT-223	2500pcs	2pcs	5000pcs	8pcs	40000pcs

Reliability Test Program

Test Item	Conditions	Duration	Sample Size
High Temperature Reverse Bias(HTRB)	T_j=125℃ or 150℃ @ 80% of Max V_{DSS}/V_{CES}/VR	168 hours 500 hours 1000 hours	3 lots x 77 devices
High Temperature Gate Bias(HTGB)	T_j=125℃ or 150℃ @ 100% of Max V_{GSS}	168 hours 500 hours 1000 hours	3 lots x 77 devices